June 24, 2009

ADDENDUM No. 1
to
INVITATION FOR BID
For FasTrak® Strategic Plan Improvement Project
Fabrication and Delivery of Sign Structures

Dear Supplier:

This Addendum is being issued to the Invitation for Bids (IFB) for FasTrack® Strategic Plan Improvement Project Fabrication and Delivery of Sign Structures dated June 9, 2009.

Submit bids for this work with the understanding and full consideration of this addendum. The revisions declared in this addendum are an essential part of the contract.

Bids for this work will be opened on July 2, 2009.

Where existing provisions of the IFB are modified, deleted text is shown in strike-through format; added text is *italicized.*

The IFB is revised as follows:

Letter of Invitation, Specifications and Schedule, Paragraph 2, Page 3:

"The scope of work for this project includes the manufacture, fabrication inspection, testing, shipping, unloading, and stockpiling of overhead sign structures. The products manufactured under this IFB will be installed under separate construction packages to be issued by BATA in ~~August~~*July* 2009."

Letter of Invitation, Specifications and Schedule, Paragraph 4, Page 3:

"Sign structures shall be delivered to *San Francisco Bay Toll Administration parking lot, or such other location to be determined by the Engineer, and tendered to the BATA Project Manager or designee for acceptance* ~~the storage site~~ no later than ~~one hundred and thirty-nine (139) calendar days following the issuance by BATA of a Purchase Order (PO)~~*5 pm on November 24, 2009*."

Invitation for Bid, Appendix A - Technical Specifications, Section II. Schedule, Page 11:

"All material furnished under this Contract must be delivered to the San Francisco Bay Toll Administration parking lot, or such other location to be determined by the Engineer, and tendered to the BATA Project Manager or designee for acceptance no

later than ~~one hundred and thirty - nine (139) calendar days after BATA issues the Purchase Order~~*5 pm on November 24, 2009*."

Appendix B – Bid Form:

				Bidder's Name_____		
ITEM NO.	**REFERENCE**	**DESCRIPTION**	**EST. QUANT**	**UNITS**	**UNIT PRICE**	**TOTAL**
FASTRAK® STRATEGIC PLAN IMPROVEMENT PROJECT						
1.	SFOBB - WEST	FURNISH SIGN STRUCTURE (TRUSS)	~~313880~~ *31400*	LB	$	$
2.	SFOBB - EAST	FURNISH SIGN STRUCTURE (TRUSS)	~~32380~~ *33600*	LB	$	$
3.	N/A	CLEAN AND PAINT STEEL STRUCTURES	1	LS	$	$
					Bid Total	$

Appendix H - Sign Structure Plans:

Revised and additional plans are provided

Sincerely,

Andrew B. Fremier
Deputy Executive Director

SFOBB ORT Gantries (50 ft Span)

Single Post Gantries

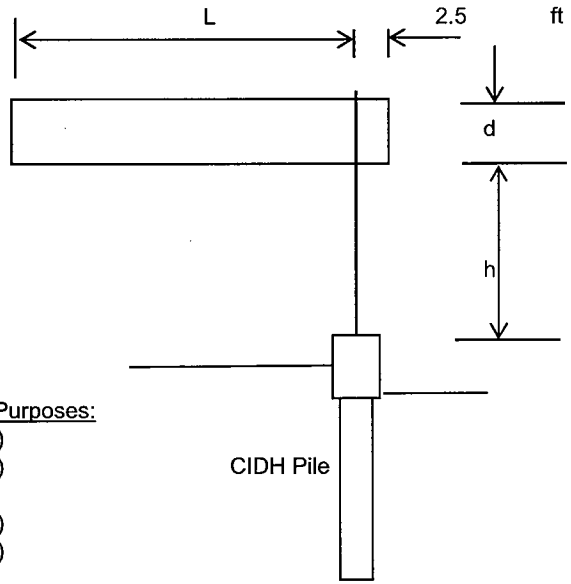

Preliminary Gantry Dimensions for Procuement Purposes:

Span, L =	50'-0"	(both gantries)
Frame Depth, d =	7'-2"	(both gantries)
Frame Width, b =	4'-0"	(both gantries)
Height, h =	16'-5"	(both gantries)
Post Type =	Special Design: 30" Dia	

Preliminary Quantity Estimate (Steel)

	L	d	h	h+d	Truss Frame	Sign Panel Frame	Post	Juncture Connect'n	Anchors	Gussets for Post Base	Base Plate	Walkway	Total Wt	Use for Prcrmnt Purposes
Gantry	ft	ft	ft	ft	lb	lb	lb	lb	lb	lb	lb	lb	lb	lb
B	50.00	7.167	16.5	23.667	12420	1344	7337	2211	1482	235	1622	6930	33582	**33600**
A	50.00	7.167	16.5	23.667	12420	0	7337	2211	1482	235	1622	6064	31372	**31400**

Notes:

1. The quantity estimate is based on Caltrans "Structural Design Aids - Overhead and Roadside Signs" and Standard Plans for Single Post Sign Truss. In addition, some adjustment has been made to account for the non-standard sections used.
2. Modifications to the gantries may be necessary as design progresses, and may result in the change to the quantities listed above.

DIST	COUNTY	ROUTE	POST MILES TOTAL PROJECT	SHEET No	TOTAL SHEETS
04	Ala	80	1.8/2.1		

REGISTERED CIVIL ENGINEER 6/24/09 DATE

PLANS APPROVAL DATE

The State of California or its officers or agents shall not be responsible for the accuracy or completeness of electronic copies of this plan sheet.

REGISTERED PROFESSIONAL ENGINEER GUOPING XU No. C 63977 Exp. 09/30/10 CIVIL STATE OF CALIFORNIA

BAY AREA TOLL AUTHORITY
101 EIGHT STREET
OAKLAND, CALIFORNIA 94607

MGE ENGINEERING, INC.
7415 GREENHAVEN DRIVE, SUITE 100
SACRAMENTO, CALIFORNIA 95831

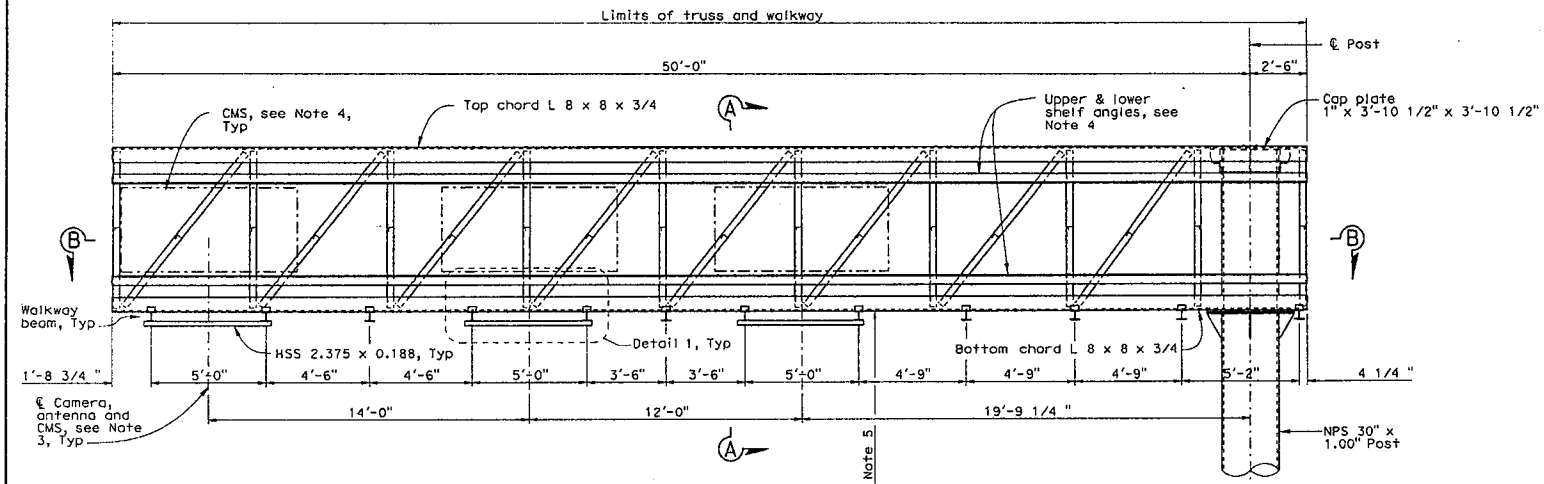

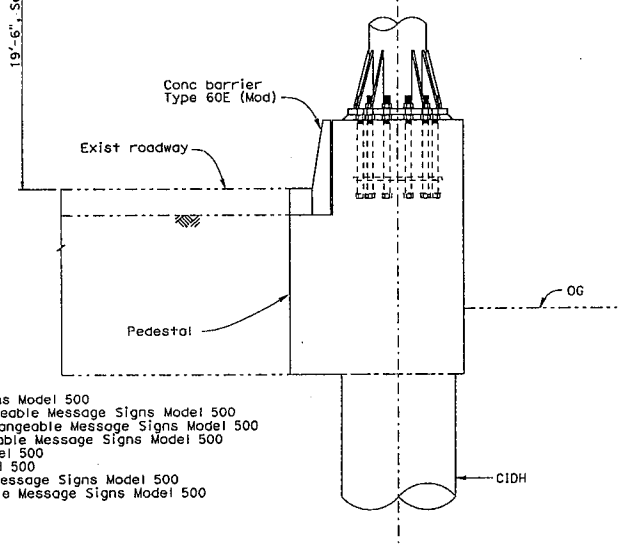

INSTRUCTIONS TO FABRICATOR

PROJECT PLANS SHOW:

1. Sign structure location.
2. Length of structure frame.
3. Panel size and locations on structure.
4. Walkway length for two post signs.
5. Post type and height to bottom of frame.
6. Base plate elevation.
7. Footing elevation or location of pile foundation.
8. Photoelectric unit location if required.

REFER TO THE FOLLOWING STANDARD PLANS DATED MAY 2006 FOR DETAILS NOT SHOWN ON PROJECT PLANS:

Sheet #	SHEET NAME
S1	Overhead Signs-Truss, Instructions and Examples
S2	Overhead Signs-Truss, Single Post Type, Post Types II to IX
S4	Overhead Signs-Truss, Single Post Type, Structural Frame Members Details No. 1
S5	Overhead Signs-Truss, Single Post Type, Structural Frame Members Details No. 2
S6	Overhead Signs-Truss, Gusset Plate Details
S7	Overhead Signs-Truss, Single Post Type, Square Pedestal Pile Foundation
S12	Overhead Signs-Truss, Structural Frame Details
S13	Overhead Signs-Truss, Frame Juncture Details
S14	Overhead Signs-Truss, Two Post Type, Square Pedestal Pile Foundation
S16	Overhead Signs, Walkway Details No. 1
S17	Overhead Signs, Walkway Details No. 2
S17A	Overhead Signs, Walkway Details No. 3
S18	Overhead Signs, Walkway Safety Railing Details
S109	Overhead Sign-Truss Single Post Type, Layout, Full Cantilever Changeable Message Signs Model 500
S110	Overhead Sign-Truss Single Post Type, Structural Frame Details, Full Cantilever Changeable Message Signs Model 500
S111	Overhead Sign-Truss Single Post Type, Plan and Upper Bolt Details, Full Cantilever Changeable Message Signs Model 500
S112	Overhead Sign-Truss Single Post Type, Frame Juncture Details, Full Cantilever Changeable Message Signs Model 500
S113	Overhead Sign-Truss Single Post Type, Mounting Details, Changeable Message Signs Model 500
S114	Overhead Sign-Truss Single Post Type, Walkway Details, Changeable Message Signs Model 500
S115	Overhead Sign-Truss Single Post Type, Anchorage and Base Plate Details, Changeable Message Signs Model 500
S116	Overhead Sign-Truss Single Post Type, Foundation and Miscellaneous Details, Changeable Message Signs Model 500

WALKWAY AND SAFETY RAILING:

Walkway to be continuous for entire length of frame for single post signs. Safety railing to protect entire walkway, but continuous for no more than 11'-0" in one unit.

ELEVATION
SCALE: 3/8" = 1'-0"
(Gantry B shown, Gantry A similar)

NOTES:

1. For sections A-A and B-B, see sheet S-2.
2. For Detail 1, see sheet S-3.
3. Location of camera, antenna and CMS is subject to field verification.
4. CMS panels, upper and lower shelf angles are required only on Gantry B.
5. The roadway clearance shown is measured from roadway surface to the underside of truss bottom chord members. The Contractor shall ensure that a minimum clearance of 18'-0" is maintained from the underside of any equipment to the finished roadway surface.

Note:
The Contractor shall verify all controlling field dimensions before ordering or fabricating any material.

S-1

DESIGN OVERSIGHT	DESIGN	BY G. Xu	CHECKED
SIGN OFF DATE	DETAILS	BY X. Sun	CHECKED
	QUANTITIES	BY	CHECKED

PREPARED FOR THE STATE OF CALIFORNIA DEPARTMENT OF TRANSPORTATION

Guoping Xu
PROJECT ENGINEER

BRIDGE NO.
POST MILE

SFOBB ORT GANTRY
GANTRY DETAILS NO. 1

DESIGN DETAIL SHEET (ENGLISH) (REV. 2/25/05)

ORIGINAL SCALE IN INCHES FOR REDUCED PLANS 0 1 2 3

CU
EA 0G420K
(FILE => $REQUEST

DISREGARD PRINTS BEARING EARLIER REVISION DATES

REVISION DATES (PRELIMINARY STAGE ONLY) 06/24/09

SHEET 1 OF

DIST	COUNTY	ROUTE	POST MILES TOTAL PROJECT	SHEET No	TOTAL SHEETS
04	Ala	80	1.8/2.1		

REGISTERED CIVIL ENGINEER DATE 6/24/09

PLANS APPROVAL DATE

The State of California or its officers or agents shall not be responsible for the accuracy or completeness of electronic copies of this plan sheet.

REGISTERED PROFESSIONAL ENGINEER — GUOPING XU — No. C 63977 — Exp. 09/30/10 — CIVIL — STATE OF CALIFORNIA

BAY AREA TOLL AUTHORITY
101 EIGHT STREET
OAKLAND, CALIFORNIA 94607

MGE ENGINEERING, INC.
7415 GREENHAVEN DRIVE, SUITE 100
SACRAMENTO, CALIFORNIA 95831

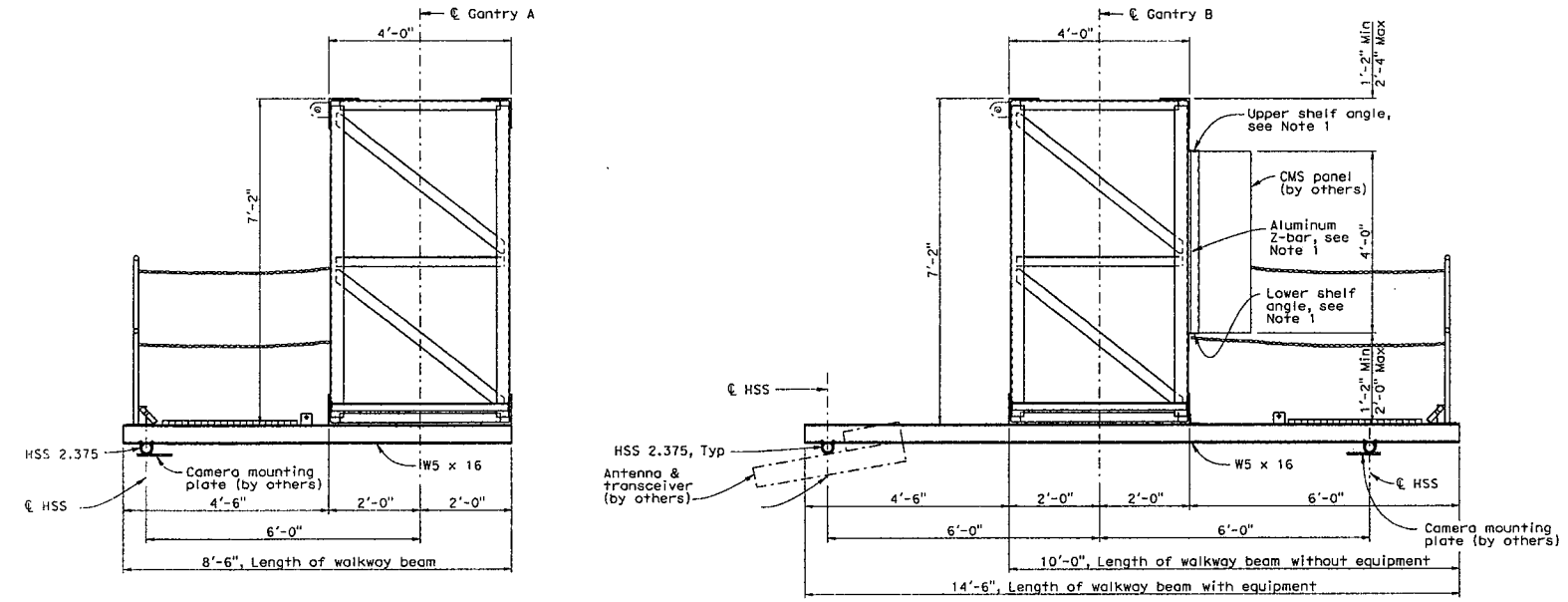

SECTION A-A

SCALE: 3/4" = 1'-0"

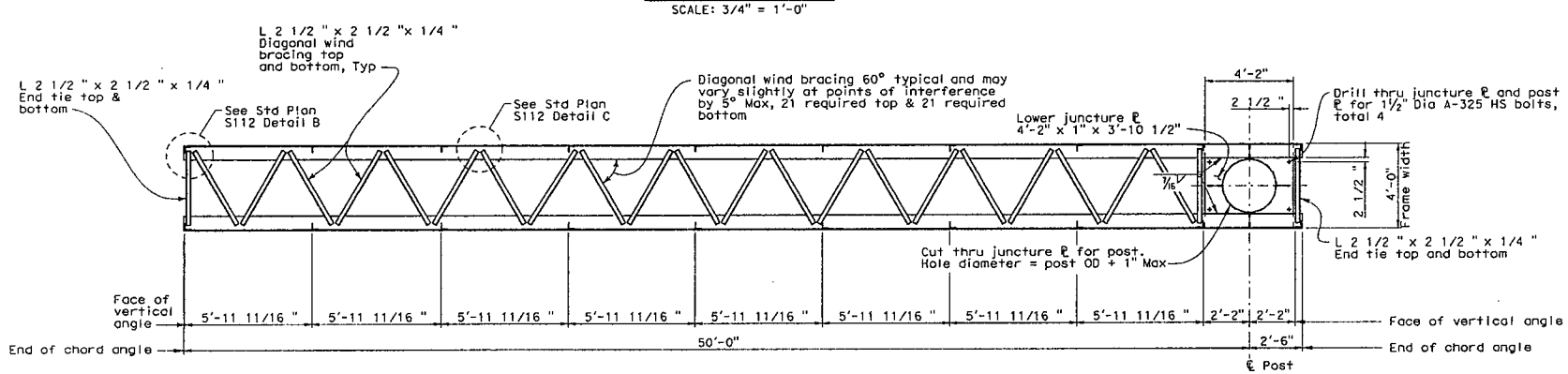

SECTION B-B

SCALE: 3/8" = 1'-0"

Note:
1. For details of upper shelf angle, lower shelf angle and Z-bar, see Detail 2 on sheet S-4.

Note:
The Contractor shall verify all controlling field dimensions before ordering or fabricating any material.

S-2

DESIGN OVERSIGHT	DESIGN	BY G. Xu	CHECKED
SIGN OFF DATE	DETAILS	BY X. Sun	CHECKED
	QUANTITIES	BY	CHECKED

PREPARED FOR THE STATE OF CALIFORNIA DEPARTMENT OF TRANSPORTATION

Guoping Xu
PROJECT ENGINEER

BRIDGE NO.
POST MILE

SFOBB ORT GANTRY
GANTRY DETAILS NO. 2

DESIGN DETAIL SHEET (ENGLISH) (REV. 2/25/05)

ORIGINAL SCALE IN INCHES FOR REDUCED PLANS 0 1 2 3

CU
EA 0G420K
FILE => $REQUEST

DISREGARD PRINTS BEARING EARLIER REVISION DATES

REVISION DATES (PRELIMINARY STAGE ONLY) 06/24/09

SHEET 2 OF

DIST	COUNTY	ROUTE	POST MILES TOTAL PROJECT	SHEET No	TOTAL SHEETS
04	Ala	80	1.8/2.1		

REGISTERED CIVIL ENGINEER DATE 6/24/09

PLANS APPROVAL DATE

The State of California or its officers or agents shall not be responsible for the accuracy or completeness of electronic copies of this plan sheet.

REGISTERED PROFESSIONAL ENGINEER — GUOPING XU — No. C 63977 — Exp. 09/30/10 — CIVIL — STATE OF CALIFORNIA

BAY AREA TOLL AUTHORITY
101 EIGHT STREET
OAKLAND, CALIFORNIA 94607

MGE ENGINEERING, INC.
7415 GREENHAVEN DRIVE, SUITE 100
SACRAMENTO, CALIFORNIA 95831

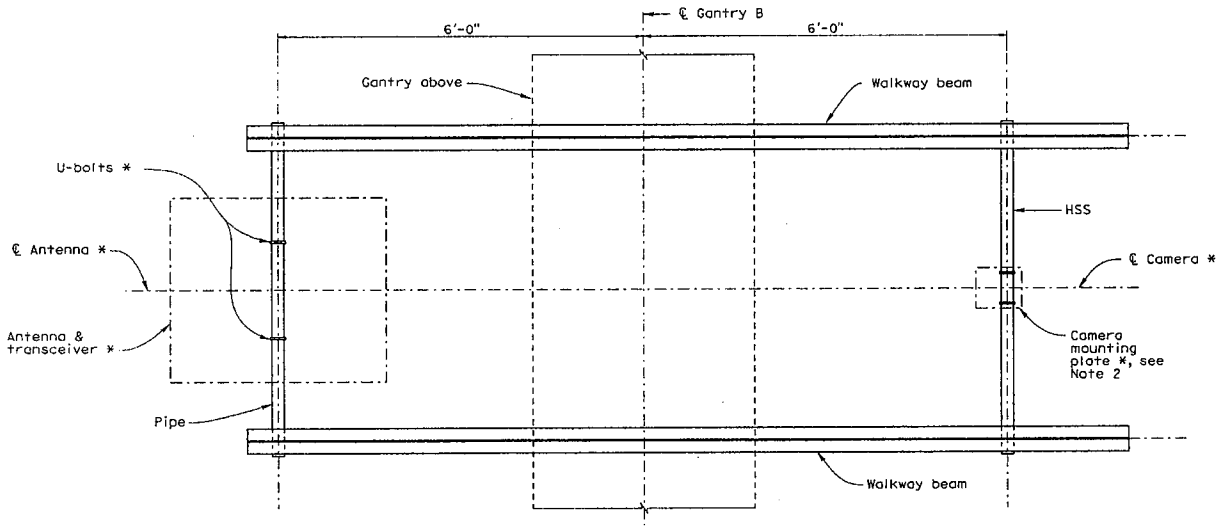

SECTION B-B

SCALE: 1" = 1'-0"

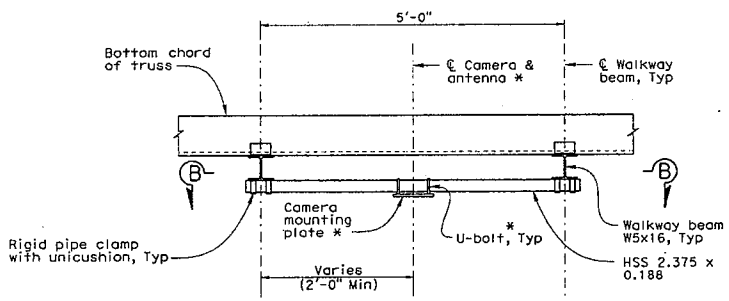

DETAIL 1

SCALE: 1" = 1'-0"

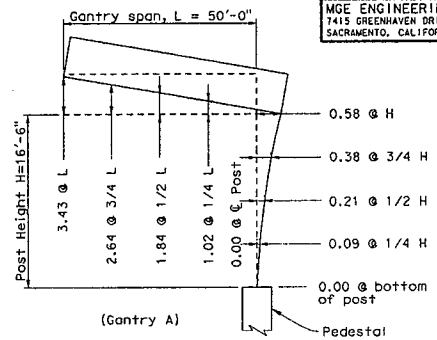

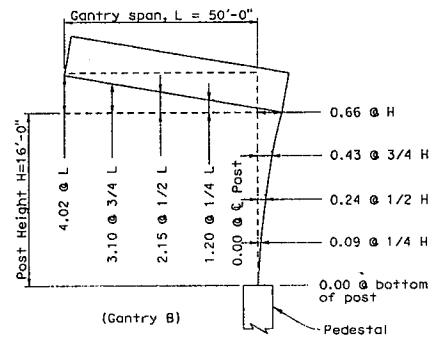

GANTRY AND POST CAMBER DIAGRAM

NTS (Unit = inches)

NOTES:

1. Items marked * are to be provided and installed by others.
2. Camera mounting detail on Gantry A is the same as that on Gantry B.
3. Camber in gantry is the total accounting for the flexibility of both post and gantry.

Note:
The Contractor shall verify all controlling field dimensions before ordering or fabricating any material.

S-3

DESIGN OVERSIGHT	DESIGN	BY G. Xu	CHECKED
SIGN OFF DATE	DETAILS	BY X. Sun	CHECKED
	QUANTITIES	BY	CHECKED

DESIGN DETAIL SHEET (ENGLISH) (REV. 2/25/05)

ORIGINAL SCALE IN INCHES FOR REDUCED PLANS 0 1 2 3

PREPARED FOR THE STATE OF CALIFORNIA DEPARTMENT OF TRANSPORTATION

Guoping Xu
PROJECT ENGINEER

CU
EA 0G420K
TFILE *> @REQUEST

BRIDGE NO.
POST MILE

SFOBB ORT GANTRY
GANTRY DETAILS NO. 3

DISREGARD PRINTS BEARING EARLIER REVISION DATES

REVISION DATES (PRELIMINARY STAGE ONLY) 06/24/09

SHEET 3 OF

DIST	COUNTY	ROUTE	POST MILES TOTAL PROJECT	SHEET No	TOTAL SHEETS
04	Ala	80	1.8/2.1		

REGISTERED CIVIL ENGINEER DATE 6/24/09

PLANS APPROVAL DATE

REGISTERED PROFESSIONAL ENGINEER GUOPING XU No. C 63977 Exp. 09/30/10 CIVIL STATE OF CALIFORNIA

The State of California or its officers or agents shall not be responsible for the accuracy or completeness of electronic copies of this plan sheet.

BAY AREA TOLL AUTHORITY
101 EIGHT STREET
OAKLAND, CALIFORNIA 94607

MGE ENGINEERING, INC.
7415 GREENHAVEN DRIVE, SUITE 100
SACRAMENTO, CALIFORNIA 95831

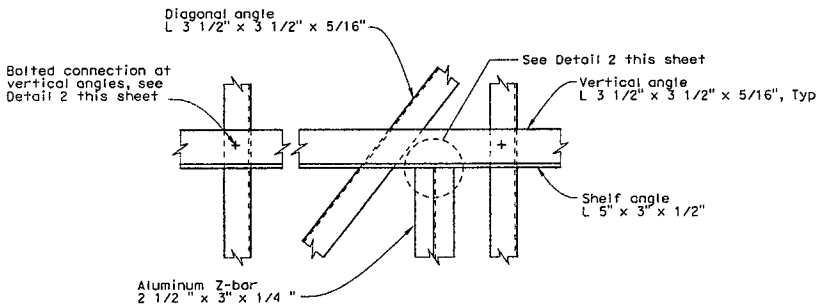

(Upper shelf angle shown, lower shelf angle similar)

SHELF ANGLE TO VERTICAL ANGLE CONNECTION DETAIL

SCALE: 1 1/2" = 1'-0"

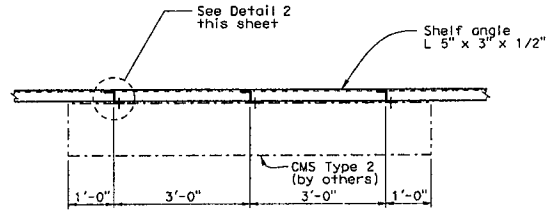

ALUMINUM Z-BAR SPACING

SCALE: 3/4" - 1'-0"

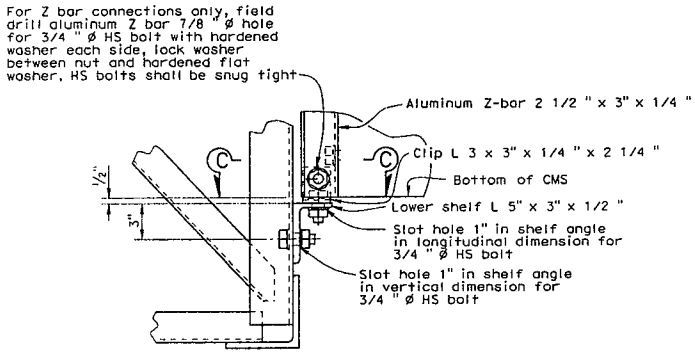

(Lower shelf angle shown, upper shelf angle similar)

DETAIL 2

N.T.S.

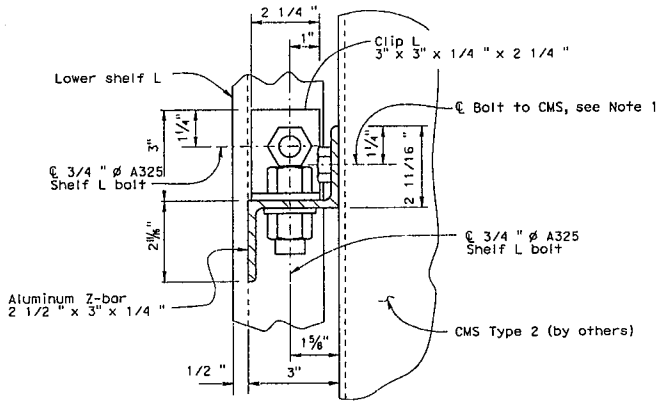

SECTION C-C

N.T.S.

NOTES:

1. CMS panel manufacturer shall be responsible for the connection details between Z-bars and CMS panel, and shall provide bolts and washers together with CMS panels.

Note:
The Contractor shall verify all controlling field dimensions before ordering or fabricating any material.

S-4

DESIGN OVERSIGHT	DESIGN	BY G. Xu	CHECKED
SIGN OFF DATE	DETAILS	BY X. Sun	CHECKED
	QUANTITIES	BY	CHECKED

DESIGN DETAIL SHEET (ENGLISH) (REV. 2/25/05)

ORIGINAL SCALE IN INCHES FOR REDUCED PLANS 0 1 2 3

PREPARED FOR THE STATE OF CALIFORNIA DEPARTMENT OF TRANSPORTATION

Guoping Xu
PROJECT ENGINEER

CU
EA 0G420K
TFILE => $REQUEST

BRIDGE NO.
POST MILE

SFOBB ORT GANTRY
GANTRY DETAILS NO. 4

DISREGARD PRINTS BEARING EARLIER REVISION DATES → 06/24/09

REVISION DATES (PRELIMINARY STAGE ONLY)

SHEET 4 OF

DIST	COUNTY	ROUTE	POST MILES TOTAL PROJECT	SHEET No	TOTAL SHEETS
04	Ala	80	1.8/2.1		

REGISTERED CIVIL ENGINEER DATE 6/24/08

PLANS APPROVAL DATE

The State of California or its officers or agents shall not be responsible for the accuracy or completeness of electronic copies of this plan sheet.

REGISTERED PROFESSIONAL ENGINEER — GUOPING XU — No. C 63977 — Exp. 09/30/10 — CIVIL — STATE OF CALIFORNIA

BAY AREA TOLL AUTHORITY
101 EIGHT STREET
OAKLAND, CALIFORNIA 94607

MGE ENGINEERING, INC.
7415 GREENHAVEN DRIVE, SUITE 100
SACRAMENTO, CALIFORNIA 95831

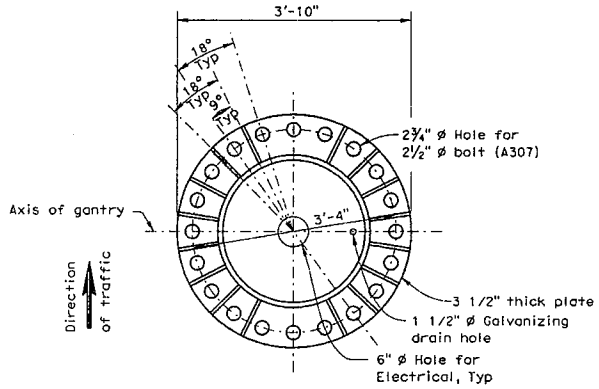

BASE PLATE DETAILS

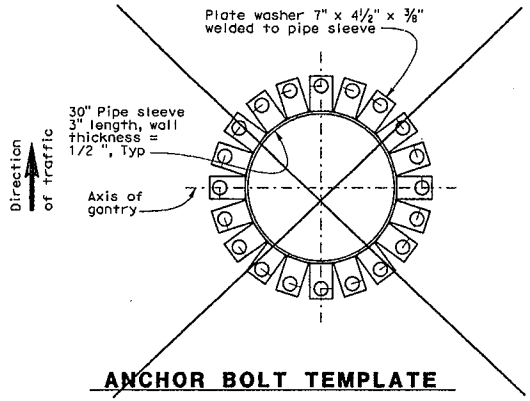

ANCHOR BOLT TEMPLATE

Template to match base plate anchor bolt pattern.

(Option: Template similar to ring plate type can be used in lieu of plate washer type).

(NOT IN CONTRACT)

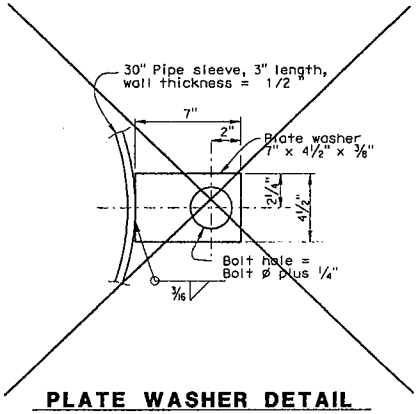

PLATE WASHER DETAIL

(NOT IN CONTRACT)

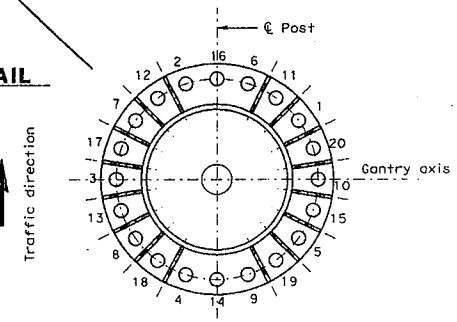

TIGHTENING SEQUENCE

NOTES:

1. Thread upper 10" and galvanize upper 1'-0" of the anchor bolts.
2. Provide anchor bolt templates during installation of anchor bolts. Templates to match base plate anchor bolts pattern.
3. Following initial tightening, upper nuts shall be brought to a snug tight condition. This can be obtained by a few impacts of an impact wrench or the full effort of a man using an ordinary spud wrench. Snug tightening shall progress systematically according to the tightening sequence as shown. Upper nuts and washers to have full even bearing on base plate.
4. 2 1/2 " ø Anchor bolts with nut, leveling nut, 2 flat washers, and plate washer per bolt. Leveling nuts and washers to be adjusted for full even bearing on base plate prior to final tightening of upper nuts. (See Note 3).

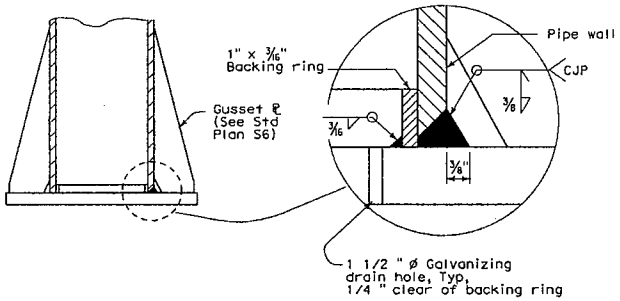

POST TO BASE PLATE CONNECTION DETAIL

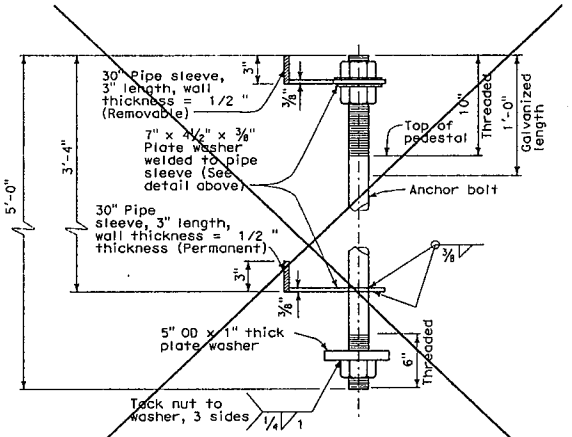

ANCHOR BOLT TEMPLATE ASSEMBLY

NOTE: One bolt shown only. Other bolts same configuration around pipe sleeve.

(NOT IN CONTRACT)

Note:
The Contractor shall verify all controlling field dimensions before ordering or fabricating any material.

S-5

DESIGN OVERSIGHT	DESIGN	BY G. Xu	CHECKED
SIGN OFF DATE	DETAILS	BY X. Sun	CHECKED
	QUANTITIES	BY	CHECKED

PREPARED FOR THE STATE OF CALIFORNIA DEPARTMENT OF TRANSPORTATION

Guoping Xu
PROJECT ENGINEER

BRIDGE NO.
POST MILE

SFOBB ORT GANTRY
BASE PLATE AND ANCHORAGE DETAILS

DESIGN DETAIL SHEET (ENGLISH) (REV. 2/25/05)

ORIGINAL SCALE IN INCHES FOR REDUCED PLANS 0 1 2 3

CU
EA 0G420K
(FILE =) @REQUEST

DISREGARD PRINTS BEARING EARLIER REVISION DATES 06/24/08

REVISION DATES (PRELIMINARY STAGE ONLY)

SHEET 5 OF

DIST	COUNTY	ROUTE	POST MILES TOTAL PROJECT	SHEET No	TOTAL SHEETS
04	Ala	80	1.8/2.1		

REGISTERED CIVIL ENGINEER DATE 6/24/09

PLANS APPROVAL DATE

The State of California or its officers or agents shall not be responsible for the accuracy or completeness of electronic copies of this plan sheet.

REGISTERED PROFESSIONAL ENGINEER GUOPING XU No. C 63977 Exp. 09/30/10 CIVIL STATE OF CALIFORNIA

BAY AREA TOLL AUTHORITY
101 EIGHT STREET
OAKLAND, CALIFORNIA 94607

MGE ENGINEERING, INC.
7415 GREENHAVEN DRIVE, SUITE 100
SACRAMENTO, CALIFORNIA 95831

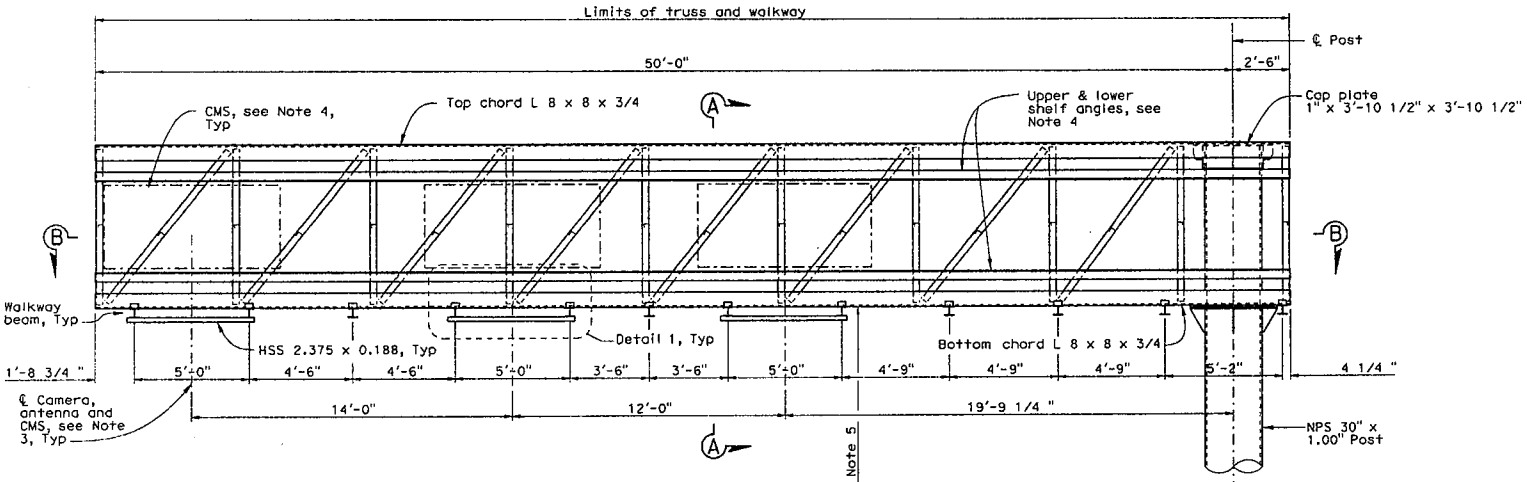

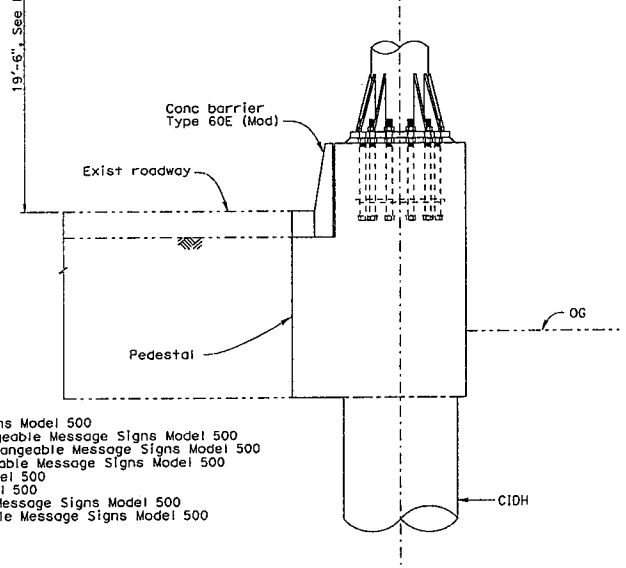

INSTRUCTIONS TO FABRICATOR

PROJECT PLANS SHOW:

1. Sign structure location.
2. Length of structure frame.
3. Panel size and locations on structure.
4. Walkway length for two post signs.
5. Post type and height to bottom of frame.
6. Base plate elevation.
7. Footing elevation or location of pile foundation.
8. Photoelectric unit location if required.

REFER TO THE FOLLOWING STANDARD PLANS DATED MAY 2006 FOR DETAILS NOT SHOWN ON PROJECT PLANS:

Sheet #	SHEET NAME
S1	Overhead Signs-Truss, Instructions and Examples
S2	Overhead Signs-Truss, Single Post Type, Post Types II to IX
S4	Overhead Signs-Truss, Single Post Type, Structural Frame Members Details No. 1
S5	Overhead Signs-Truss, Single Post Type, Structural Frame Members Details No. 2
S6	Overhead Signs-Truss, Gusset Plate Details
S7	Overhead Signs-Truss, Single Post Type, Square Pedestal Pile Foundation
S12	Overhead Signs-Truss, Structural Frame Details
S13	Overhead Signs-Truss, Frame Juncture Details
S14	Overhead Signs-Truss, Two Post Type, Square Pedestal Pile Foundation
S16	Overhead Signs, Walkway Details No. 1
S17	Overhead Signs, Walkway Details No. 2
S17A	Overhead Signs, Walkway Details No. 3
S18	Overhead Signs, Walkway Safety Railing Details
S109	Overhead Sign-Truss Single Post Type, Layout, Full Cantilever Changeable Message Signs Model 500
S110	Overhead Sign-Truss Single Post Type, Structural Frame Details, Full Cantilever Changeable Message Signs Model 500
S111	Overhead Sign-Truss Single Post Type, Plan and Upper Bolt Details, Full Cantilever Changeable Message Signs Model 500
S112	Overhead Sign-Truss Single Post Type, Frame Juncture Details, Full Cantilever Changeable Message Signs Model 500
S113	Overhead Sign-Truss Single Post Type, Mounting Details, Changeable Message Signs Model 500
S114	Overhead Sign-Truss Single Post Type, Walkway Details, Changeable Message Signs Model 500
S115	Overhead Sign-Truss Single Post Type, Anchorage and Base Plate Details, Changeable Message Signs Model 500
S116	Overhead Sign-Truss Single Post Type, Foundation and Miscellaneous Details, Changeable Message Signs Model 500

WALKWAY AND SAFETY RAILING:

Walkway to be continuous for entire length of frame for single post signs. Safety railing to protect entire walkway, but continuous for no more than 11'-0" in one unit.

ELEVATION
SCALE: 3/8" = 1'-0"

(Gantry B shown, Gantry A similar)

NOTES:

1. For sections A-A and B-B, see sheet S-2.
2. For Detail 1, see sheet S-3.
3. Location of camera, antenna and CMS is subject to field verification.
4. CMS panels, upper and lower shelf angles are required only on Gantry B.
5. The roadway clearance shown is measured from roadway surface to the underside of truss bottom chord members. The Contractor shall ensure that a minimum clearance of 18'-0" is maintained from the underside of any equipment to the finished roadway surface.

Note:
The Contractor shall verify all controlling field dimensions before ordering or fabricating any material.

S-1

DESIGN OVERSIGHT	DESIGN BY C. Xu	CHECKED	PREPARED FOR THE STATE OF CALIFORNIA DEPARTMENT OF TRANSPORTATION
SIGN OFF DATE	DETAILS BY X. Sun	CHECKED	Guoping Xu, PROJECT ENGINEER
	QUANTITIES BY	CHECKED	

BRIDGE NO. / POST MILE

SFOBB ORT GANTRY
GANTRY DETAILS NO. 1

DESIGN DETAIL SHEET (ENGLISH) (REV. 2/25/05)

ORIGINAL SCALE IN INCHES FOR REDUCED PLANS 0 1 2 3

CU
EA 0G420K
FILE •> $REQUEST

DISREGARD PRINTS BEARING EARLIER REVISION DATES 06/24/09

REVISION DATES (PRELIMINARY STAGE ONLY)

SHEET 1 OF

DIST	COUNTY	ROUTE	POST MILES TOTAL PROJECT	SHEET NO	TOTAL SHEETS
04	Ala	80	1.8/2.1		

REGISTERED CIVIL ENGINEER 6/24/09 DATE

PLANS APPROVAL DATE

The State of California or its officers or agents shall not be responsible for the accuracy or completeness of electronic copies of this plan sheet.

REGISTERED PROFESSIONAL ENGINEER GUOPING XU No. C 63977 Exp. 09/30/10 CIVIL STATE OF CALIFORNIA

BAY AREA TOLL AUTHORITY
101 EIGHT STREET
OAKLAND, CALIFORNIA 94607

MGE ENGINEERING, INC.
7415 GREENHAVEN DRIVE, SUITE 100
SACRAMENTO, CALIFORNIA 95831

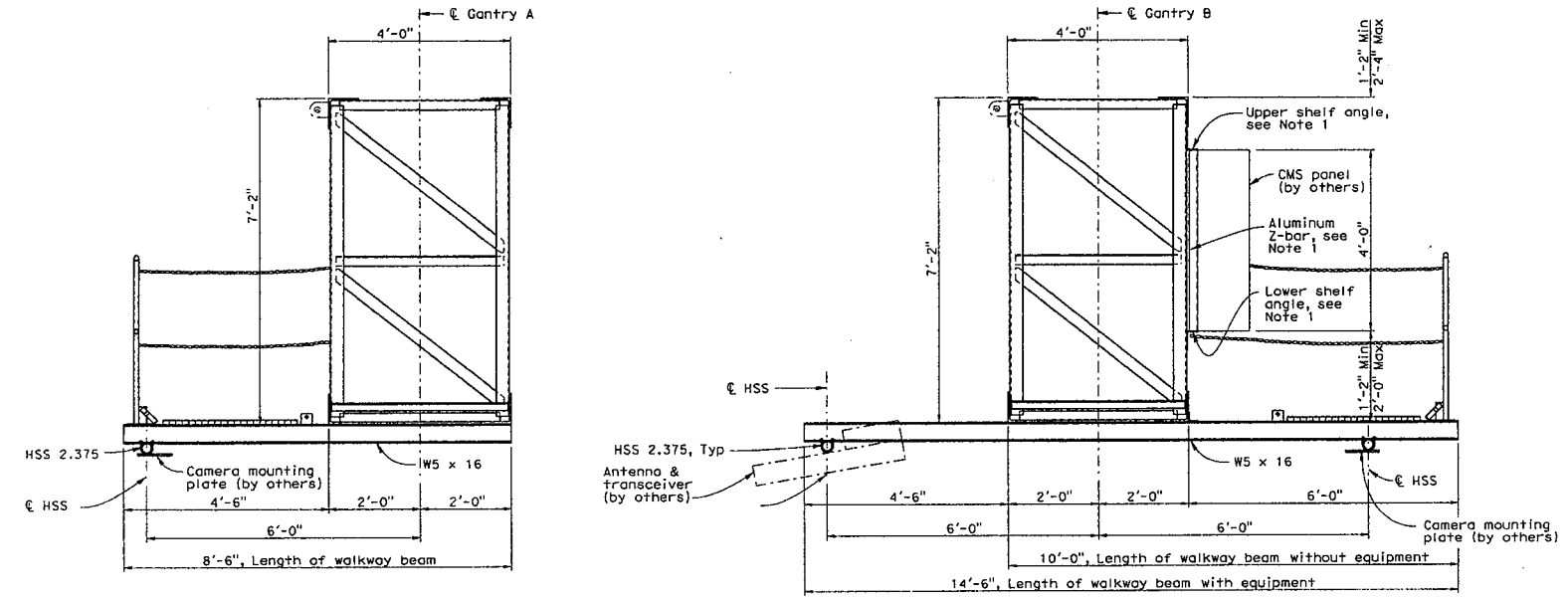

SECTION A-A

SCALE: 3/4" = 1'-0"

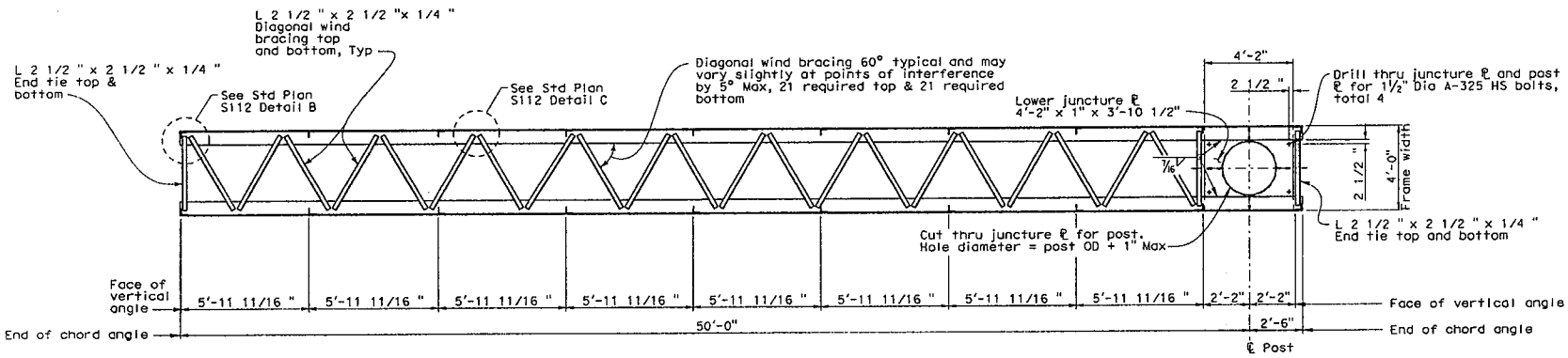

SECTION B-B

SCALE: 3/8" = 1'-0"

Note:
1. For details of upper shelf angle, lower shelf angle and Z-bar, see Detail 2 on sheet S-4.

Note:
The Contractor shall verify all controlling field dimensions before ordering or fabricating any material.

S-2

DESIGN OVERSIGHT	DESIGN	BY G. Xu	CHECKED
	DETAILS	BY X. Sun	CHECKED
SIGN OFF DATE	QUANTITIES	BY	CHECKED

DESIGN DETAIL SHEET (ENGLISH) (REV. 2/25/05)

ORIGINAL SCALE IN INCHES FOR REDUCED PLANS 0 1 2 3

PREPARED FOR THE STATE OF CALIFORNIA DEPARTMENT OF TRANSPORTATION

Guoping Xu
PROJECT ENGINEER

CU
EA 0G420K
FILE => #REQUEST

BRIDGE NO.
POST MILE

SFOBB ORT GANTRY

GANTRY DETAILS NO. 2

DISREGARD PRINTS BEARING EARLIER REVISION DATES 06/24/09

REVISION DATES (PRELIMINARY STAGE ONLY)

SHEET 2 OF

DIST	COUNTY	ROUTE	POST MILES TOTAL PROJECT	SHEET No	TOTAL SHEETS
04	Ala	80	1.8/2.1		

REGISTERED CIVIL ENGINEER DATE 6/24/09

PLANS APPROVAL DATE

REGISTERED PROFESSIONAL ENGINEER GUOPING XU No. C 63977 Exp. 09/30/10 CIVIL STATE OF CALIFORNIA

The State of California or its officers or agents shall not be responsible for the accuracy or completeness of electronic copies of this plan sheet.

BAY AREA TOLL AUTHORITY
101 EIGHT STREET
OAKLAND, CALIFORNIA 94607

MGE ENGINEERING, INC.
7415 GREENHAVEN DRIVE, SUITE 100
SACRAMENTO, CALIFORNIA 95831

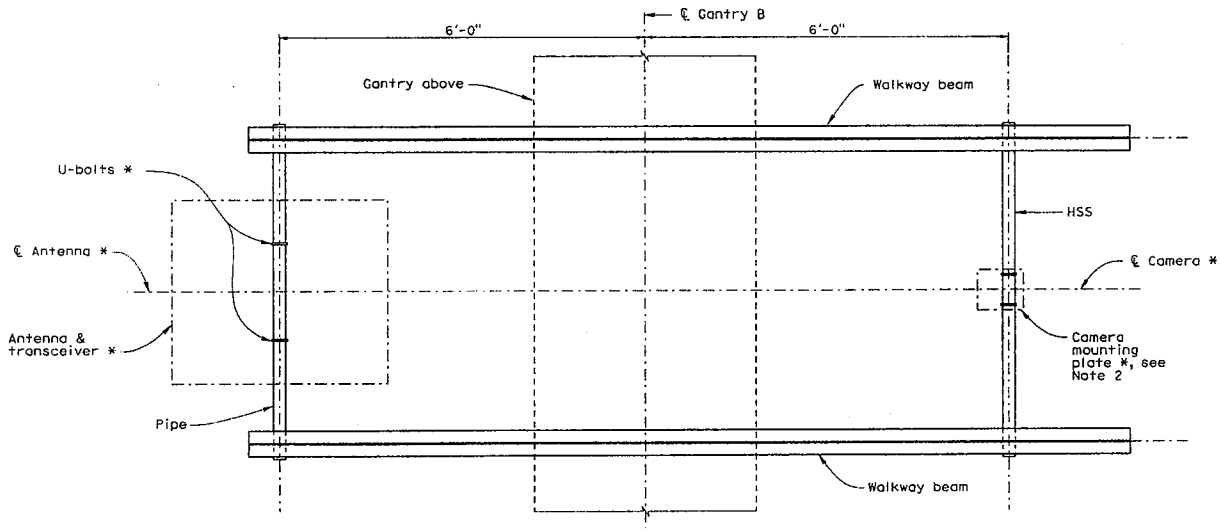

SECTION B-B

SCALE: 1" = 1'-0"

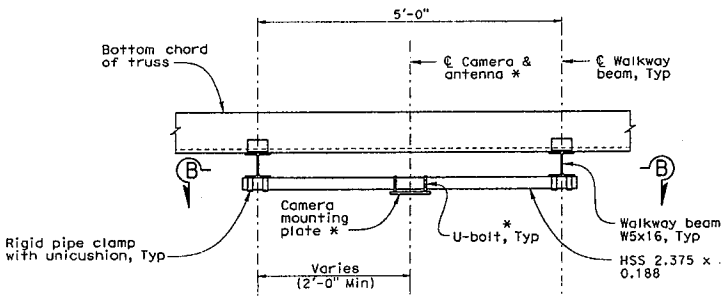

DETAIL 1

SCALE: 1" = 1'-0"

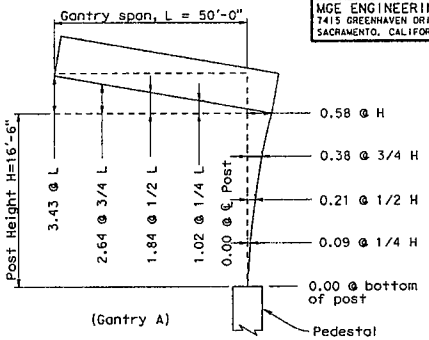

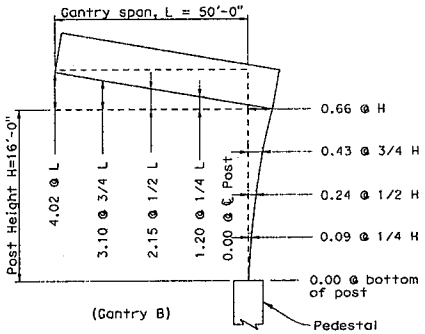

GANTRY AND POST CAMBER DIAGRAM

NTS (Unit = inches)

NOTES:

1. Items marked * are to be provided and installed by others.
2. Camera mounting detail on Gantry A is the same as that on Gantry B.
3. Camber in gantry is the total accounting for the flexibility of both post and gantry.

Note:
The Contractor shall verify all controlling field dimensions before ordering or fabricating any material.

S-3

DESIGN OVERSIGHT	DESIGN	BY G. Xu	CHECKED
	DETAILS	BY X. Sun	CHECKED
SIGN OFF DATE	QUANTITIES	BY	CHECKED

DESIGN DETAIL SHEET (ENGLISH) (REV. 2/25/03)

ORIGINAL SCALE IN INCHES FOR REDUCED PLANS 0 1 2 3

PREPARED FOR THE STATE OF CALIFORNIA DEPARTMENT OF TRANSPORTATION

Guoping Xu
PROJECT ENGINEER

CU
EA 0G420K
FILE => @REQUEST

BRIDGE NO.
POST MILE

SFOBB ORT GANTRY

GANTRY DETAILS NO. 3

DISREGARD PRINTS BEARING EARLIER REVISION DATES 06/21/09

REVISION DATES (PRELIMINARY STAGE ONLY)

SHEET 3 OF

DIST	COUNTY	ROUTE	POST MILES TOTAL PROJECT	SHEET No	TOTAL SHEETS
04	Ala	80	1.8/2.1		

6/24/09

REGISTERED CIVIL ENGINEER DATE

PLANS APPROVAL DATE

The State of California or its officers or agents shall not be responsible for the accuracy or completeness of electronic copies of this plan sheet.

REGISTERED PROFESSIONAL ENGINEER GUOPING XU No. C 63977 Exp. 09/30/10 CIVIL STATE OF CALIFORNIA

BAY AREA TOLL AUTHORITY
101 EIGHT STREET
OAKLAND, CALIFORNIA 94607

MGE ENGINEERING, INC.
7415 GREENHAVEN DRIVE, SUITE 100
SACRAMENTO, CALIFORNIA 95831

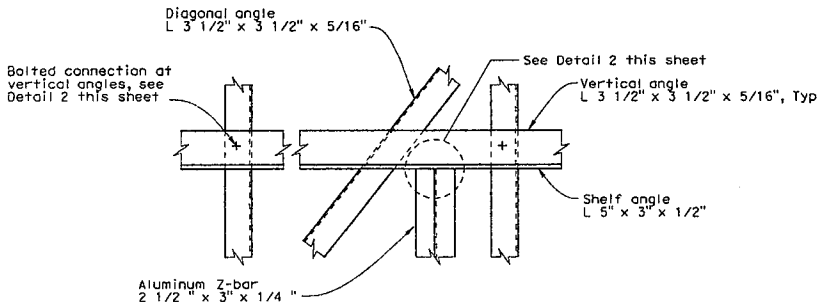

(Upper shelf angle shown, lower shelf angle similar)

SHELF ANGLE TO VERTICAL ANGLE CONNECTION DETAIL

SCALE: 1 1/2" = 1'-0"

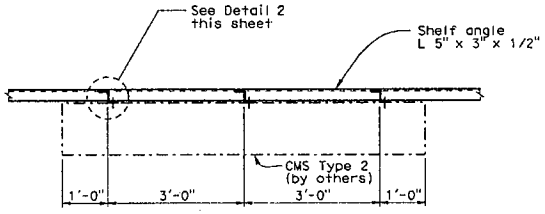

ALUMINUM Z-BAR SPACING

SCALE: 3/4" - 1'-0"

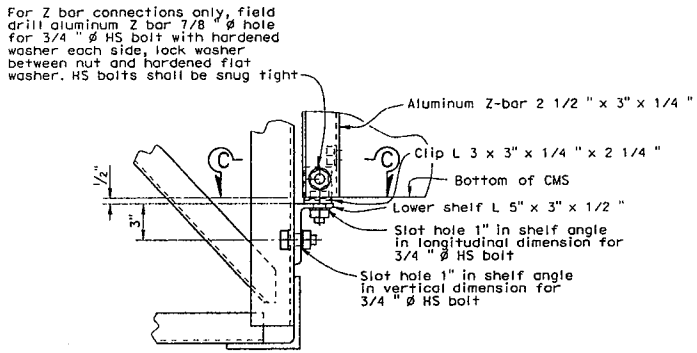

(Lower shelf angle shown, upper shelf angle similar)

DETAIL 2

N.T.S.

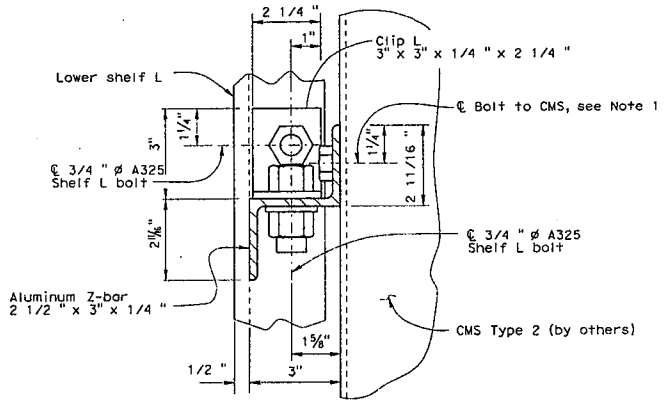

SECTION C-C

N.T.S.

NOTES:

1. CMS panel manufacturer shall be responsible for the connection details between Z-bars and CMS panel, and shall provide bolts and washers together with CMS panels.

Note:
The Contractor shall verify all controlling field dimensions before ordering or fabricating any material.

S-4

DESIGN OVERSIGHT	DESIGN	BY G. Xu	CHECKED
SIGN OFF DATE	DETAILS	BY X. Sun	CHECKED
	QUANTITIES	BY	CHECKED

DESIGN DETAIL SHEET (ENGLISH) (REV. 2/25/05)

ORIGINAL SCALE IN INCHES FOR REDUCED PLANS 0 1 2 3

PREPARED FOR THE STATE OF CALIFORNIA DEPARTMENT OF TRANSPORTATION

Guoping Xu
PROJECT ENGINEER

CU
EA 0G420K
(FILE => $REQUEST

BRIDGE NO.
POST MILE

SFOBB ORT GANTRY
GANTRY DETAILS NO. 4

DISREGARD PRINTS BEARING EARLIER REVISION DATES 06/11/09

REVISION DATES (PRELIMINARY STAGE ONLY)

SHEET 4 OF

DIST	COUNTY	ROUTE	POST MILES TOTAL PROJECT	SHEET No	TOTAL SHEETS
04	Ala	80	1.8/2.1		

REGISTERED CIVIL ENGINEER DATE 6/24/09

PLANS APPROVAL DATE

The State of California or its officers or agents shall not be responsible for the accuracy or completeness of electronic copies of this plan sheet.

REGISTERED PROFESSIONAL ENGINEER — GUOPING XU — No. C 63977 — Exp. 09/30/10 — CIVIL — STATE OF CALIFORNIA

BAY AREA TOLL AUTHORITY
101 EIGHT STREET
OAKLAND, CALIFORNIA 94607

MGE ENGINEERING, INC.
7415 GREENHAVEN DRIVE, SUITE 100
SACRAMENTO, CALIFORNIA 95831

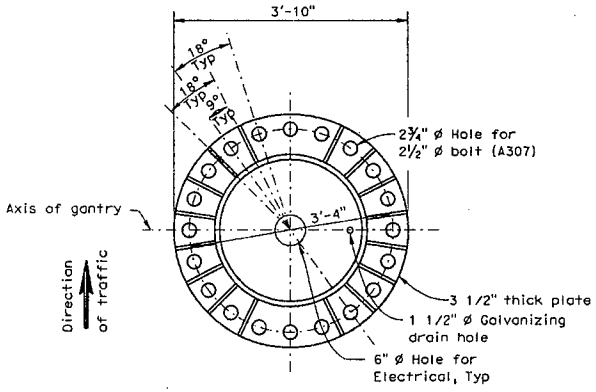

BASE PLATE DETAILS

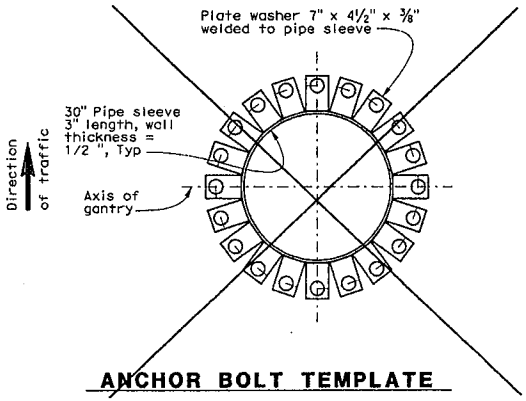

ANCHOR BOLT TEMPLATE

Template to match base plate anchor bolt pattern.

(Option: Template similar to ring plate type can be used in lieu of plate washer type).

(NOT IN CONTRACT)

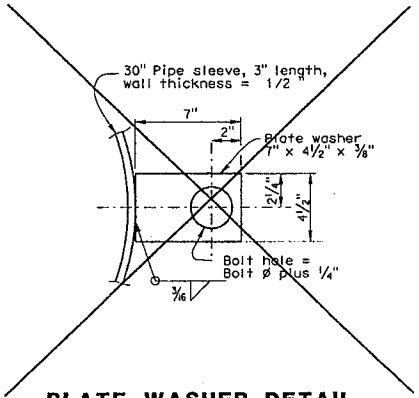

PLATE WASHER DETAIL

(NOT IN CONTRACT)

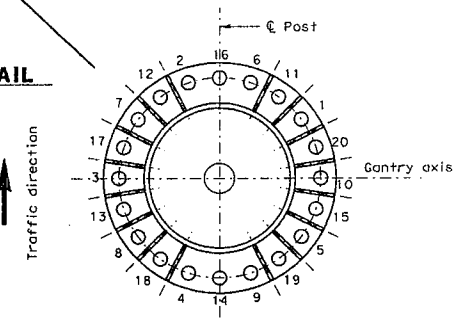

TIGHTENING SEQUENCE

NOTES:

1. Thread upper 10" and galvanize upper 1'-0" of the anchor bolts.
2. Provide anchor bolt templates during installation of anchor bolts. Templates to match base plate anchor bolts pattern.
3. Following initial tightening, upper nuts shall be brought to a snug tight condition. This can be obtained by a few impacts of an impact wrench or the full effort of a man using an ordinary spud wrench. Snug tightening shall progress systematically according to the tightening sequence as shown. Upper nuts and washers to have full even bearing on base plate.
4. 2 1/2 " ø Anchor bolts with nut, leveling nut, 2 flat washers, and plate washer per bolt. Leveling nuts and washers to be adjusted for full even bearing on base plate prior to final tightening of upper nuts. (See Note 3).

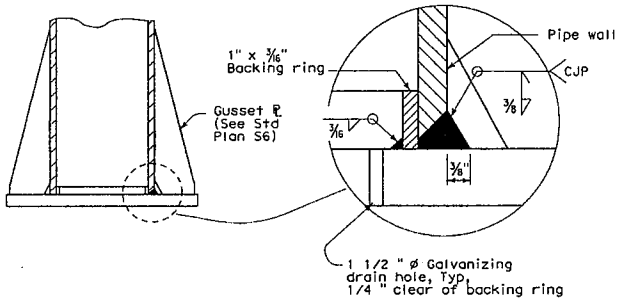

POST TO BASE PLATE CONNECTION DETAIL

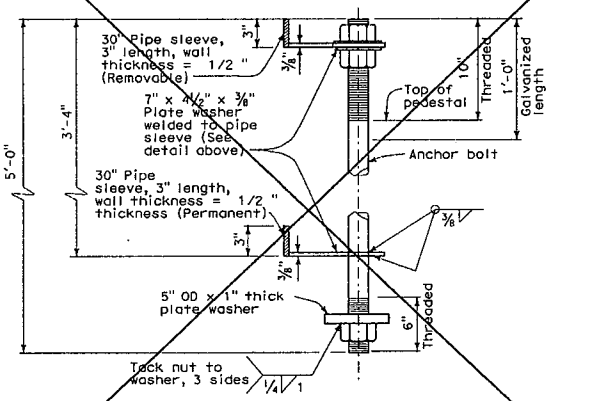

ANCHOR BOLT TEMPLATE ASSEMBLY

NOTE: One bolt shown only. Other bolts same configuration around pipe sleeve.

(NOT IN CONTRACT)

Note:
The Contractor shall verify all controlling field dimensions before ordering or fabricating any material.

S-5

DESIGN OVERSIGHT	DESIGN	BY G. Xu	CHECKED
SIGN OFF DATE	DETAILS	BY X. Sun	CHECKED
	QUANTITIES	BY	CHECKED

PREPARED FOR THE STATE OF CALIFORNIA DEPARTMENT OF TRANSPORTATION

Guoping Xu
PROJECT ENGINEER

BRIDGE NO.
POST MILE

SFOBB ORT GANTRY
BASE PLATE AND ANCHORAGE DETAILS

DESIGN DETAIL SHEET (ENGLISH) (REV. 2/25/05)

ORIGINAL SCALE IN INCHES FOR REDUCED PLANS 0 1 2 3

CU
EA 0G420K
(FILE +) $REQUEST

DISREGARD PRINTS BEARING EARLIER REVISION DATES

REVISION DATES (PRELIMINARY STAGE ONLY) 06/24/09

SHEET 5 OF