Dist	COUNTY	ROUTE	POST MILES TOTAL PROJECT	SHEET No.	TOTAL SHEETS
04	Ala	80	1.8/2.1		

REGISTERED CIVIL ENGINEER DATE

PLANS APPROVAL DATE

REGISTERED PROFESSIONAL ENGINEER No. Exp. CIVIL STATE OF CALIFORNIA

THE STATE OF CALIFORNIA OR ITS OFFICERS OR AGENTS SHALL NOT BE RESPONSIBLE FOR THE ACCURACY OR COMPLETENESS OF SCANNED COPIES OF THIS PLAN SHEET.

BAY AREA TOLL AUTHORITY
101 EIGHTH STREET
OAKLAND, CA 94607

URS CORPORATION
55 SOUTH MARKET STREET
SUITE 1500
SAN JOSE, CA 95113-2332

PROJECT NOTES:

1. INSTALL NEW TYPE D CABLE IN EXISTING CONDUIT (FOR CMS).
2. INSTALL NEW 1½" TYPE 1 CONDUIT WITH NEW TYPE D CABLE (CMS).
3. INSTALL NEW 1½" TYPE 1 CONDUIT WITH 4 #6 & 1 #8G (120/280V PANEL MPE1). PROVIDE CONDUIT SUPPORT. ROUTE CONDUIT ALONG EXISTING CONDUIT.
4. EXISTING ¾" TYPE 1 CONDUIT WITH 4 #10 TO EXISTING PANEL "MTPE".
5. TO EXISTING PANEL K-K (CKT #10, 70A/3 MAIN)(EMERGENCY POWER).
6. TO EXISTING MAIN SWBD (CKT #2, 175A/3 MAIN)(NORMAL POWER).
7. TO EXISTING UPS PANEL (150A/3 MAIN)(UPS POWER).
8. AT EXISTING PANEL MPE, INSTALL ONE 50A-3P CIRCUIT BREAKER IN EXISTING SPACES (FOR NEW PANEL-MPE1 FEEDER).
9. INSTALL NEW ¾" TYPE 1 CONDUIT WITH 3 #12 & 1 #12G. (120V, 1-PHASE, CMS CABINET). PROVIDE CONDUIT SUPPORT.
10. CORE DRILL EXISTING CONCRETE WALL TO ACCOMMODATE CONDUIT. WATERTIGHT SEAL AROUND CONDUIT PER CALTRANS REQUIREMENTS WITH FAST-SETTING EPOXY RESIN THROUGHOUT THE DEPTH OF HOLE.
11. ~~AT EXISTING PANEL TB3, PROVIDE TWO 20A-1P CIRCUIT BREAKERS IN EXISTING SPACES. (FOR ZEC & AVI CABINETS) AND ONE 20A-1P CIRCUIT BREAKER (120V, FLASHERS) IN EXISTING SPACE.~~ NOT USED THIS CONTRACT (TYP.)
12. INSTALL NEW ¾" TYPE 1 CONDUIT (EMPTY). PROVIDE CONDUIT SUPPORT EVERY 5 FEET (MAX.).
13. ~~INSTALL TYPE 5(T) PULL BOX WITH COVER MARKED "CALTRANS POWER". SEE SHEET E-10 FOR DETAILS.~~
14. INSTALL NEW 1½" TYPE 2 CONDUIT WITH 4 #12 & 1 #12G (120V, CMS).
15. INSTALL NEW 1½" TYPE 1 CONDUIT WITH 4 #12 & 1 #12G (120V, CMS). PROVIDE CONDUIT SUPPORT AS NECESSARY.
16. INSTALL NEW SURFACE MOUNTED PANEL - MPE1. 100A BUS, 120/208 V, 3-PHASE, MLO, WITH 40A-3P MAIN, 24 POLES. PROVIDE SEVEN 20A-1P BRANCH CIRCUIT BREAKERS.
17. DISCONNECT EXISTING FEEDERS TO EXISTING MINI TOLL PLAZA AT THE BEGINNING OF DEMOLITION STAGE OR WHEN DIRECTED BY ENGINEER.
18. ALL ELECTRICAL AND COMMUNICATIONS CIRCUITS TO THE MINI TOLL PLAZA ARE TO BE DISCONNECTED AND REMOVED. THE CONTRACTOR SHALL COORDINATE CLOSELY WITH CALTRANS AND BATA ON ALL REMOVED MATERIALS AND EQUIPMENT.
19. INSTALL NEW SURFACE MOUNTED JUNCTION BOX.
20. ~~INSTALL NEW ORT EQUIPMENT CABINETS AS SPECIFIED. TOLL EQUIPMENT AND CABLING SHALL BE INSTALLED BY OTHERS.~~
21. INSTALL NEW CMS PLAZA CABINET AS SPECIFIED. (SIMILAR TO EXISTING CMS PLAZA CABINET IN UTILITY TUNNEL) ALL CMS EQUIPMENT AND CABLING SHALL BE FURNISHED, INSTALLED, INTEGRATED AND TESTED BY CONTRACTOR.
22. ~~INSTALL WIREWAY (CABLE TRAY) AS SPECIFIED MOUNTED ALONG THE EAST WALL OF THE PEDESTRIAN TUNNEL.~~
23. INSTALL NEW 2" TYPE 1 CONDUIT (EMPTY).
24. INSTALL NEW ¾" TYPE 1 CONDUIT (EMPTY).
25. TO EXISTING UPS PANEL (70A/3P MAIN)(UPS POWER).
26. REMOVE AND DISPOSE OF AS DIRECTED BY THE ENGINEER.
27. INSTALL NEW 1½" TYPE 1 CONDUIT (EMPTY).
28. INSTALL NEW 4" TYPE 1 CONDUIT (EMPTY).
29. INSTALL NEW 2" TYPE 1 CONDUIT WITH CMS COMM CABLES (TO BE PROVIDED BY CMS MANUFACTURER).

GENERAL NOTES:

1. ALL WORK AND MATERIALS SHALL CONFORM TO THE LATEST VERSION OF THE CALTRANS STANDARD PLAN AND SPECIFICATIONS
2. CALL UNDERGROUND SERVICE ALERT 48 HOURS BEFORE EXCAVATION U.S.A. (800) 277-2600.
3. ALL ELECTRICAL, CMS AND TOLL SYSTEM EQUIPMENT, INFRASTRUCTURE, LANDSCAPING OR BUILDINGS DAMAGED BY THE CONTRACTOR'S OPERATIONS SHALL BE REPAIRED OR REPLACED AT THE CONTRACTOR'S EXPENSE.
4. ALL ELECTRICAL AND ORT EQUIPMENT INCLUDING CONDUITS, JUNCTION AND SPLICE BOXES ARE SHOWN IN APPROXIMATE LOCATIONS ONLY. EXACT LOCATIONS TO BE DETERMINED IN FIELD BY ENGINEER.
5. SERVICE EQUIPMENT, ZEC, AVI AND CMS PLAZA CABINET ENCLOSURES, CONTROLLER ASSEMBLIES, CMS AND OTHER ELECTRICAL EQUIPMENT ARE SHOWN IN APPROXIMATE LOCATIONS ONLY. EXACT LOCATION SHALL BE DETERMINED TO SUIT FIELD CONDITIONS AS DIRECTED BY THE ENGINEER.
6. ALL EXISTING ELECTRICAL AND COMMUNICATION EQUIPMENT SHOWN ON THE PLANS IS FOR REFERENCE AND SHALL REMAIN IN PLACE UNLESS OTHERWISE NOTED. LOCATIONS ARE APPROXIMATED. ANY DAMAGE TO THE EXISTING ELECTRICAL AND COMMUNICATION EQUIPMENT SHALL BECOME THE RESPONSIBILITY OF THE CONTRACTOR.
7. NEW CIRCUIT BREAKERS TO BE INSTALLED TO EXISTING PANEL BOXES SHALL MATCH THE EXISTING TYPE OR APPROVED BY THE ENGINEER AS REQUIRED.
8. ALL DIMENSIONS INDICATED ARE TO BE VERIFIED IN FIELD PRIOR TO COMMENCING WORK.
9. THE CONTRACTOR SHALL IDENTITY AND VERIFY ALL EXISTING UTILITIES, POWER SOURCES AND POWER CONSUMPTIONS AS SHOWN ON THE PLANS PRIOR TO COMMENCING WORK.
10. SEE STRUCTURAL PLANS FOR EXACT LOCATION OF TEMPORARY ORT TOLLING STRUCTURES, FRAMES AND MOUNTING BRACKETS.
11. ALL ABOVE GROUND CONDUIT SHALL BE SUPPORTED AT A MINIMUM OF EVERY 5 FEET.
12. ALL ELECTRICAL ITEMS THAT USE ANCHORS TO ATTACH TO THE CONCRETE STRUCTURES SHALL USE STAINLESS STEEL POWER STUD ANCHORS-THREADED VERSION SIZED PER MANUFACTURER RECOMMENDATION AND EPOXY ANCHOR HOLES USING SEALANT WITH A RATED LIFE OF 25 YEARS OR GREATER.
13. ALL ELECTRICAL WORK SHALL MEET ALL REQUIREMENTS OF THE LATEST EDITIONS OF THE NEC & NATIONAL ELECTRICAL SAFETY CODE. ALL COMPONENTS SHALL BE PROPERLY GROUNDED AND BONDED PER NEC REQUIREMENTS.
14. CONTRACTOR SHALL USE TYPE 1 CONDUIT IN TUNNEL AND TRENCH, TYPE 2 CONDUIT FOR EXPOSED CONDITIONS, TYPE 3 CONDUIT FOR UNDERGROUND POWER AND TYPE 4 FLEXIBLE CONDUIT AS SHOWN ON PLANS.
15. ALL EXTERIOR PULL BOXES AND JUNCTION BOXES SHALL BE NEMA 4X.
16. ALL ELECTRICAL AND EXTERIOR CONNECTIONS SHALL BE WEATHERPROOF.

INDEX:

E-1 GENERAL AND PROJECT NOTES, LEGEND, ABBREVIATIONS AND INDEX
E-2 TUNNEL CONDUIT ROUTING
E-3 TUNNEL LEVEL CONDUIT ROUTING
E-4 LANE LEVEL CONDUIT ROUTING
E-5 TO E-19 MISCELLANEOUS ELECTRICAL DETAILS
E-20 CONDUIT ROUTING - ONE LINE DIAGRAM & SCHEDULE (LANE LEVEL)
E-21 CONDUIT ROUTING - ONE LINE DIAGRAM & SCHEDULE (TUNNEL LEVEL)

LEGEND:

- CHANGEABLE MESSAGE SIGN
- EXISTING CONDUIT
- NEW CONDUIT
- JUNCTION BOX
- EXISTING JUNCTION BOX
- CONDUIT CLAMPS
- CMS PLAZA CABINET
- ORT CABINET
- TERMINAL BLOCK
- CONDUIT IN
- CONDUIT OUT

ABBREVIATIONS:

AVI	AUTOMATIC VEHICLE IDENTIFICATION
CMS	CHANGEABLE MESSAGE SIGN
ETC	ELECTRONIC TOLL COLLECTION
FDU	FIBER DISTRIBUTION UNIT
JB	JUNCTION BOX
LCD	LIQUID CRYSTAL DISPLAY
NEC	NATIONAL ELECTRICAL CODE
ORT	OPEN ROAD TOLLING
PCC	PORTLAND CEMENT CONCRETE
PVC	POLYVINYL CHLORIDE CONDUIT
RMC	RIGID METAL CONDUIT
SFOBB	SAN FRANSISCO OAKLAND BAY BRIDGE
TB	TERMINAL BLOCKS
TYPE A CABLE	36 SINGLE MODE FIBER OPTIC CABLE
TYPE D CABLE	12 SINGLE MODE FIBER OPTIC CABLE
TYPE 1 CONDUIT	GALVANIZED RIGID STEEL (GRS)
TYPE 2 CONDUIT	TYPE 1 CONDUIT COATED WITH PVC OR POLYETHYLENE
TYPE 4 CONDUIT	LIQUIDTIGHT FLEXIBLE METAL CONDUIT
UPS	UNINTERRUPTIBLE POWER SUPPLY
ZEC	ZONE EQUIPMENT CABINET

GENERAL AND PROJECT NOTES, LEGEND, ABBREVIATION, AND INDEX

THIS PLAN ACCURATE FOR ELECTRICAL WORK ONLY

E-1

STATE OF CALIFORNIA - DEPARTMENT OF TRANSPORTATION
Caltrans®
CONSULTANT FUNCTIONAL SUPERVISOR: LARRY JONES
CALCULATED-DESIGNED BY
CHECKED BY
REVISED BY
DATE REVISED

LAST REVISION 00-00-00
DATE PLOTTED => 6/8/2009
TIME PLOTTED => 4:51:36 AM

Dist	COUNTY	ROUTE	POST MILES TOTAL PROJECT	SHEET No.	TOTAL SHEETS
04	Ala	80	1.8/2.1		

REGISTERED CIVIL ENGINEER DATE

PLANS APPROVAL DATE

REGISTERED PROFESSIONAL ENGINEER No. Exp. CIVIL STATE OF CALIFORNIA

THE STATE OF CALIFORNIA OR ITS OFFICERS OR AGENTS SHALL NOT BE RESPONSIBLE FOR THE ACCURACY OR COMPLETENESS OF SCANNED COPIES OF THIS PLAN SHEET.

BAY AREA TOLL AUTHORITY
101 EIGHTH STREET
OAKLAND, CA 94607

URS CORPORATION
55 SOUTH MARKET STREET
SUITE 1500
SAN JOSE, CA 95113-2332

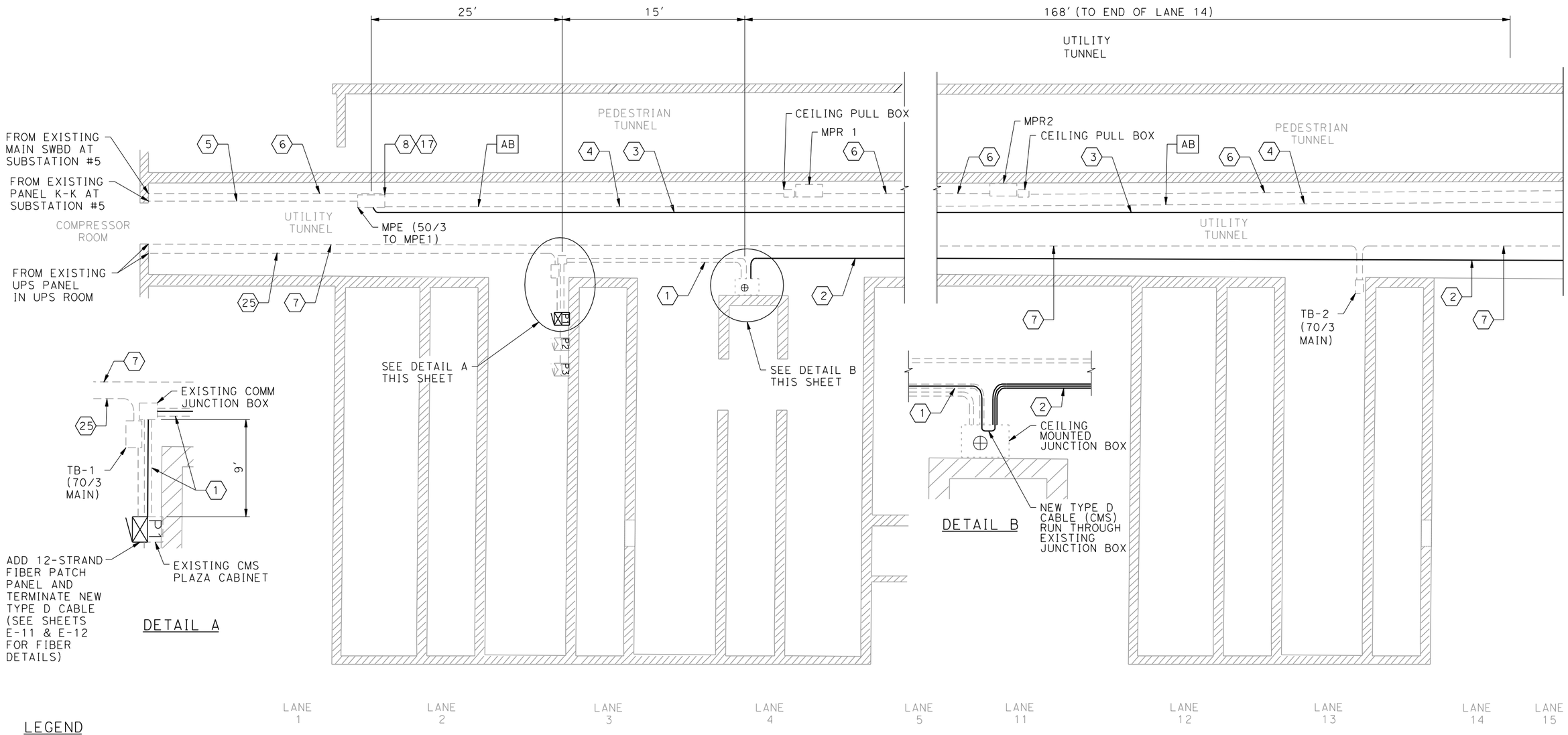

LEGEND

P1 = PLAZA CABINET 1
P2 = PLAZA CABINET 2
P3 = PLAZA CABINET 3

TUNNEL LEVEL - PARTIAL FLOOR PLAN VIEW

TUNNEL CONDUIT ROUTING

NO SCALE

THIS PLAN ACCURATE FOR ELECTRICAL WORK ONLY

E-2

STATE OF CALIFORNIA - DEPARTMENT OF TRANSPORTATION

Caltrans

CONSULTANT FUNCTIONAL SUPERVISOR: LARRY JONES

CALCULATED-DESIGNED BY | CHECKED BY | REVISED BY | DATE REVISED

LAST REVISION 00-00-00 | DATE PLOTTED => 6/8/2009 | TIME PLOTTED => 4:51:42 AM

BORDER LAST REVISED 4/11/2008 | RELATIVE BORDER SCALE IS IN INCHES 0 1 2 3

USERNAME=> FBT03
DGN FILE=> c:\my projects\bryan\bata - ort cad files\submittal -- may 19-2009\Final 5_26_09\E-2.dgn

CU 00000 | EA 0G420K

Dist	COUNTY	ROUTE	POST MILES TOTAL PROJECT	SHEET No.	TOTAL SHEETS
04	Ala	80	1.8/2.1		

REGISTERED CIVIL ENGINEER DATE

PLANS APPROVAL DATE

REGISTERED PROFESSIONAL ENGINEER No. Exp. CIVIL STATE OF CALIFORNIA

THE STATE OF CALIFORNIA OR ITS OFFICERS OR AGENTS SHALL NOT BE RESPONSIBLE FOR THE ACCURACY OR COMPLETENESS OF SCANNED COPIES OF THIS PLAN SHEET.

BAY AREA TOLL AUTHORITY
101 EIGHTH STREET
OAKLAND, CA 94607

URS CORPORATION
55 SOUTH MARKET STREET
SUITE 1500
SAN JOSE, CA 95113-2332

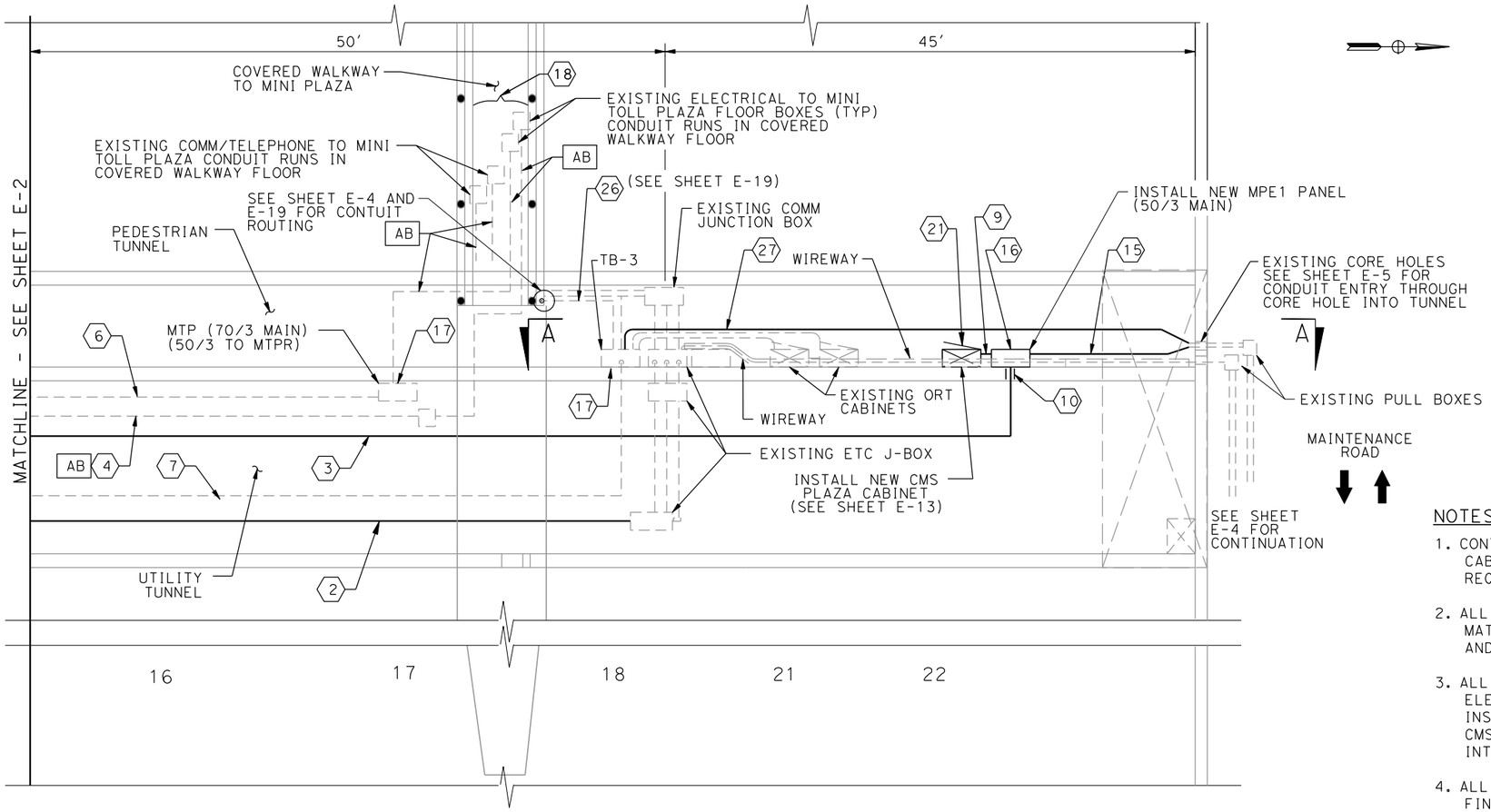

TUNNEL LEVEL CONDUIT ROUTING

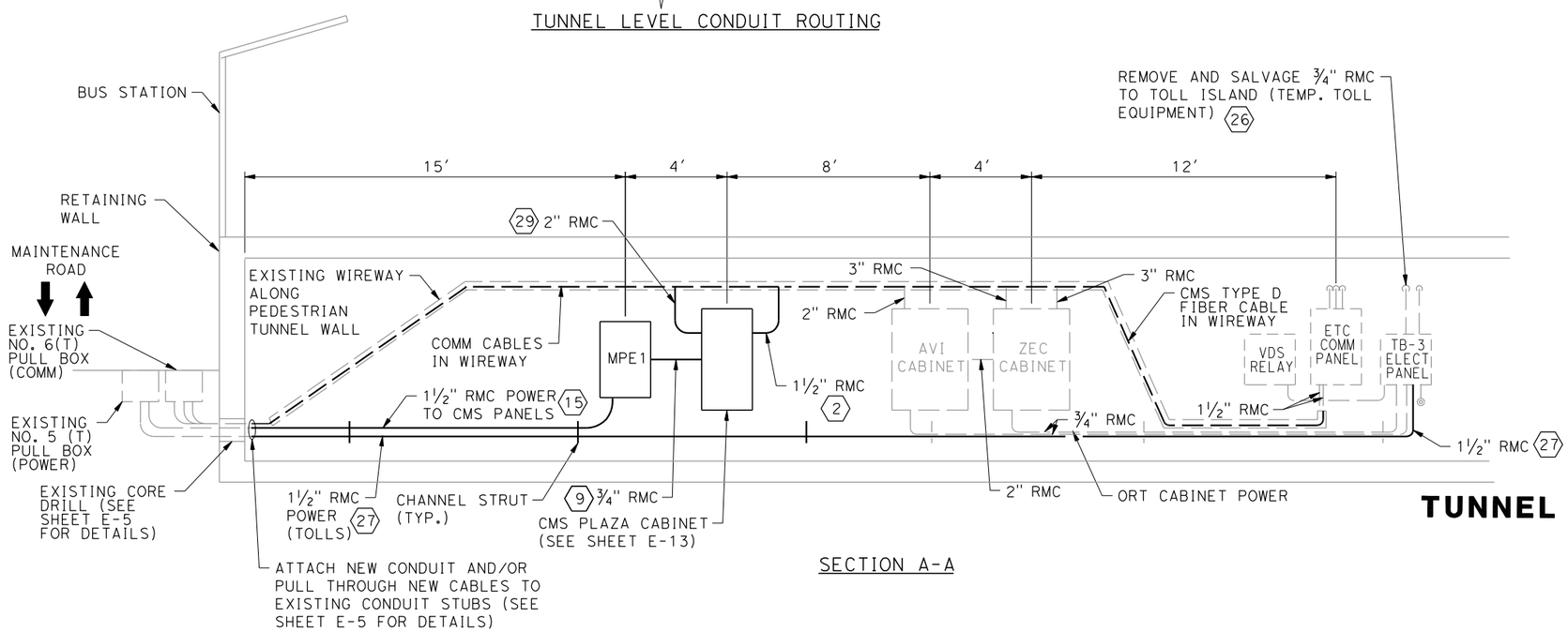

SECTION A-A

NOTES:

1. CONTRACTOR SHALL INSTALL NEW WALL MOUNTED CMS PLAZA CABINET, EQUIPMENT AND MATERIALS MEETING THE MINIMUM REQUIREMENTS IN THE PLANS AND SPECIFICATIONS.
2. ALL CMS SYSTEM, ASSOCIATED CABLING, EQUIPMENT AND MATERIALS SHALL BE PROVIDED, INSTALLED, INTEGRATED AND TESTED BY THE CONTRACTOR.
3. ALL ORT TOLLING EQUIPMENT, CABLING (COMM AND ELECTRICAL), AND ALL OTHER REQUIRED MATERIALS WILL BE INSTALLED BY OTHERS. THE CONTRACTOR SHALL COORDINATE CMS INSTALLATION WORK WITH THE ORT TOLL SYSTEMS INTEGRATOR AND THE CMS MANUFACTURER.
4. ALL CONDUIT LOCATIONS AND QUANTITIES ARE APPROXIMATE. FINAL CONFIGURATION, LOCATION AND QUANTITY OF ALL EQUIPMENT AND MATERIALS SHALL BE FIELD VERIFIED BY CONTRACTOR AND AS DIRECTED AND APPROVED BY THE ENGINEER.
5. ALL CABINETS MOUNTED TO THE CONCRETE TUNNEL WALL SHALL BE ATTACHED TO THE WALL USING 3/8" DIA. EXPANSION ANCHORS. TOTAL 4 PER CABINET ATTACHED TO THE CONCRETE WALL.
6. REMOVE AND DISPOSE OF EXISTING AVI ANTENNA AND COMM CABLES IN WIREWAY RUNNING FROM ORT CABINET TO EXISTING ETC COMM PANEL. COORDINATE REMOVAL WITH THE ENGINEER AND THE ORT TOLL SYSTEMS INTEGRATOR.

TUNNEL LEVEL CONDUIT ROUTING

NO SCALE

THIS PLAN ACCURATE FOR ELECTRICAL WORK ONLY

E-3

REVISED BY | DATE REVISED
CALCULATED-DESIGNED BY | CHECKED BY
CONSULTANT FUNCTIONAL SUPERVISOR: LARRY JONES
STATE OF CALIFORNIA - DEPARTMENT OF TRANSPORTATION
Caltrans

LAST REVISION 00-00-00 | DATE PLOTTED => 6/8/2009 TIME PLOTTED => 4:51:45 AM

Dist	COUNTY	ROUTE	POST MILES TOTAL PROJECT	SHEET No.	TOTAL SHEETS
04	Ala	80	1.8/2.1		

REGISTERED CIVIL ENGINEER DATE

PLANS APPROVAL DATE

REGISTERED PROFESSIONAL ENGINEER No. Exp. CIVIL STATE OF CALIFORNIA

THE STATE OF CALIFORNIA OR ITS OFFICERS OR AGENTS SHALL NOT BE RESPONSIBLE FOR THE ACCURACY OR COMPLETENESS OF SCANNED COPIES OF THIS PLAN SHEET.

BAY AREA TOLL AUTHORITY
101 EIGHTH STREET
OAKLAND, CA 94607

URS CORPORATION
55 SOUTH MARKET STREET
SUITE 1500
SAN JOSE, CA 95113-2332

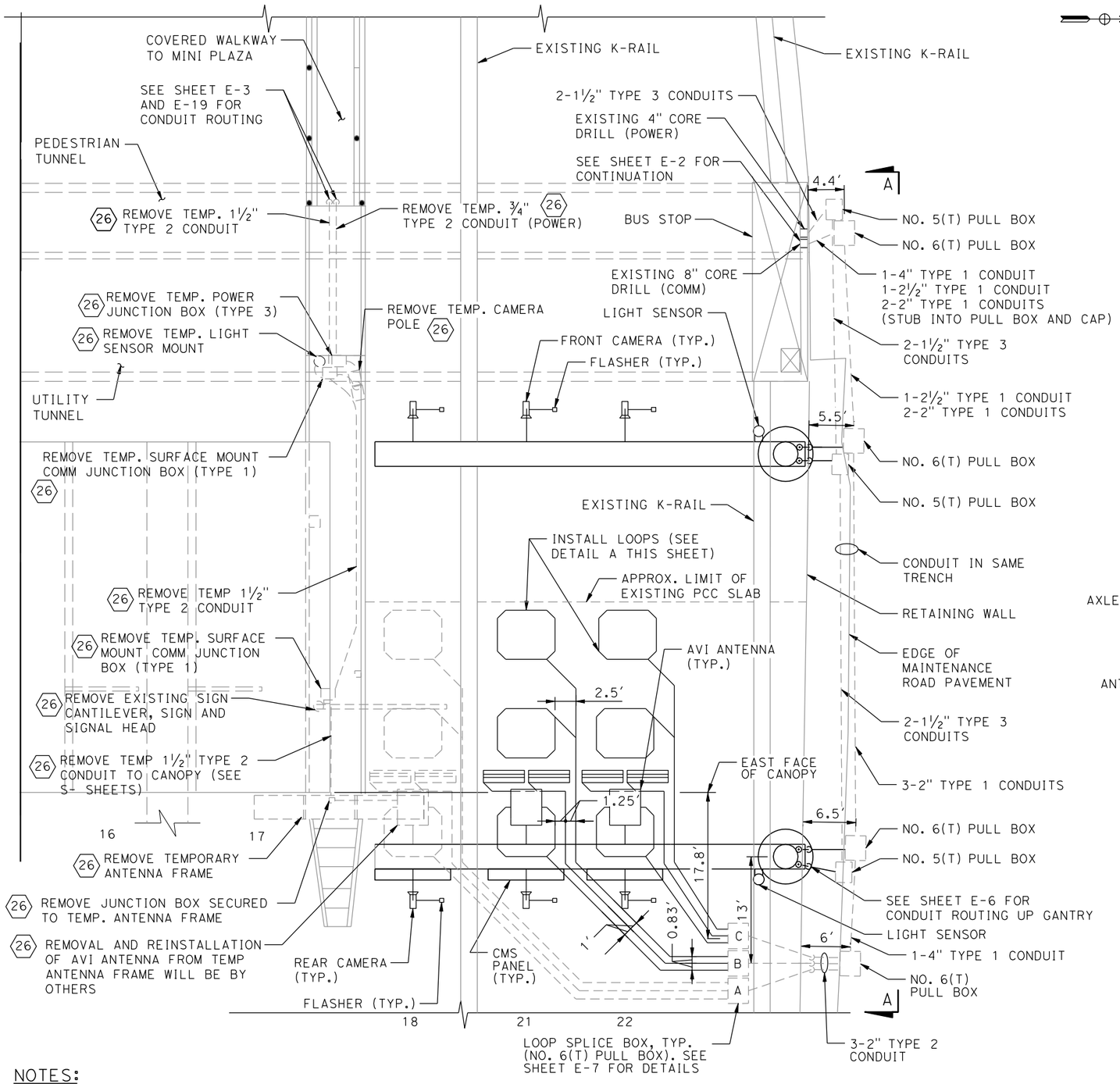

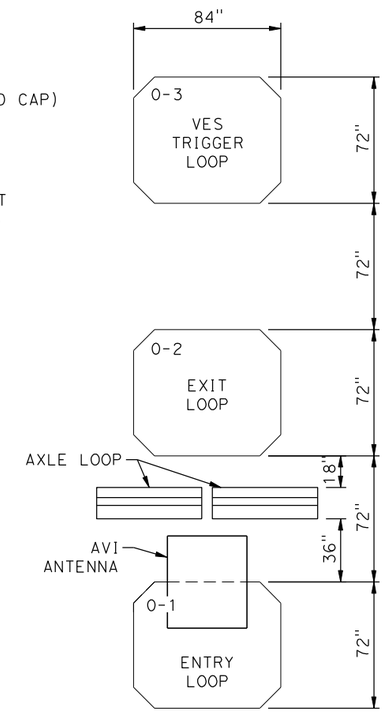

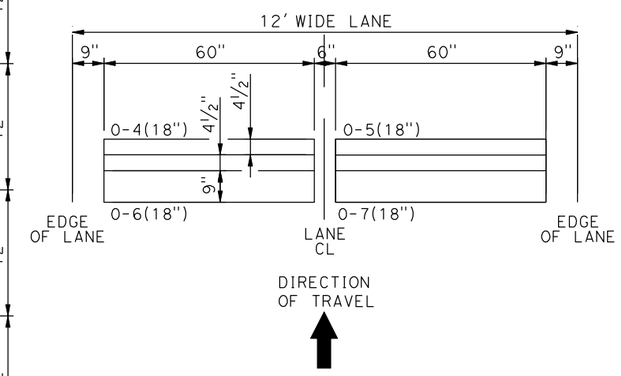

DETAIL A - LOOP CONFIGURATION

NOTES:

1. FOR SECTION A-A, SEE SHEET E-5.
2. ALL ORT/TOLL EQUIPMENT SHOWN IS FOR ILLUSTRATION PURPOSES ONLY AND WILL BE INSTALLED BY OTHERS.
3. REMOVAL AND DISPOSAL OF ALL EQUIPMENT AND MATERIALS SHALL BE COORDINATED WITH AND AS DIRECTED BY THE ENGINEER. CANOPY FACADE SHALL BE RESORED TO ORIGINAL CONDITION.
4. CONTRACTOR SHALL CUT LOOPS, INSTALL LOOP CONDUCTORS AND SEAL LOOPS AS PER THE PLANS AND SPECIFICATIONS.
5. CONTRACTOR TO WORK CLOSELY WITH THE ORT TOLL SYSTEMS INTEGRATOR IN THE INSTALLATION AND SPLICING OF LOOPS FOR LANES 21 AND 22.
6. CONTRACTOR TO ROUTE CONDUIT DOWN GANTRIES TAKING INTO ACCOUNT THE RELOCATION OF THE EXPOSED STORM DRAIN PIPE AT THE BASE OF THE WALL ON MAINTENANCE (RADIO) ROAD.

THIS PLAN ACCURATE FOR ELECTRICAL WORK ONLY

LANE LEVEL CONDUIT ROUTING

NO SCALE

E-4

REVISED BY | DATE REVISED | CALCULATED-DESIGNED BY | CHECKED BY | CONSULTANT FUNCTIONAL SUPERVISOR: LARRY JONES

STATE OF CALIFORNIA - DEPARTMENT OF TRANSPORTATION

Caltrans

LAST REVISION 00-00-00 | DATE PLOTTED => 6/8/2009 | TIME PLOTTED => 4:51:49 AM

BORDER LAST REVISED 4/11/2008 | RELATIVE BORDER SCALE IS IN INCHES 0 1 2 3 | USERNAME=> FBT03 | DGN FILE=> c:\my projects\bryan\bata - ort cad files\submittal -- may 19-2009\Final 5_26_09\Conduit_Rout_UpperLevel.dgn | CU 00000 | EA 0G420K

Dist	COUNTY	ROUTE	POST MILES TOTAL PROJECT	SHEET No.	TOTAL SHEETS
04	Ala	80	1.8/2.1		

REGISTERED CIVIL ENGINEER DATE

PLANS APPROVAL DATE

REGISTERED PROFESSIONAL ENGINEER No. Exp. CIVIL STATE OF CALIFORNIA

THE STATE OF CALIFORNIA OR ITS OFFICERS OR AGENTS SHALL NOT BE RESPONSIBLE FOR THE ACCURACY OR COMPLETENESS OF SCANNED COPIES OF THIS PLAN SHEET.

BAY AREA TOLL AUTHORITY
101 EIGHTH STREET
OAKLAND, CA 94607

URS CORPORATION
55 SOUTH MARKET STREET
SUITE 1500
SAN JOSE, CA 95113-2332

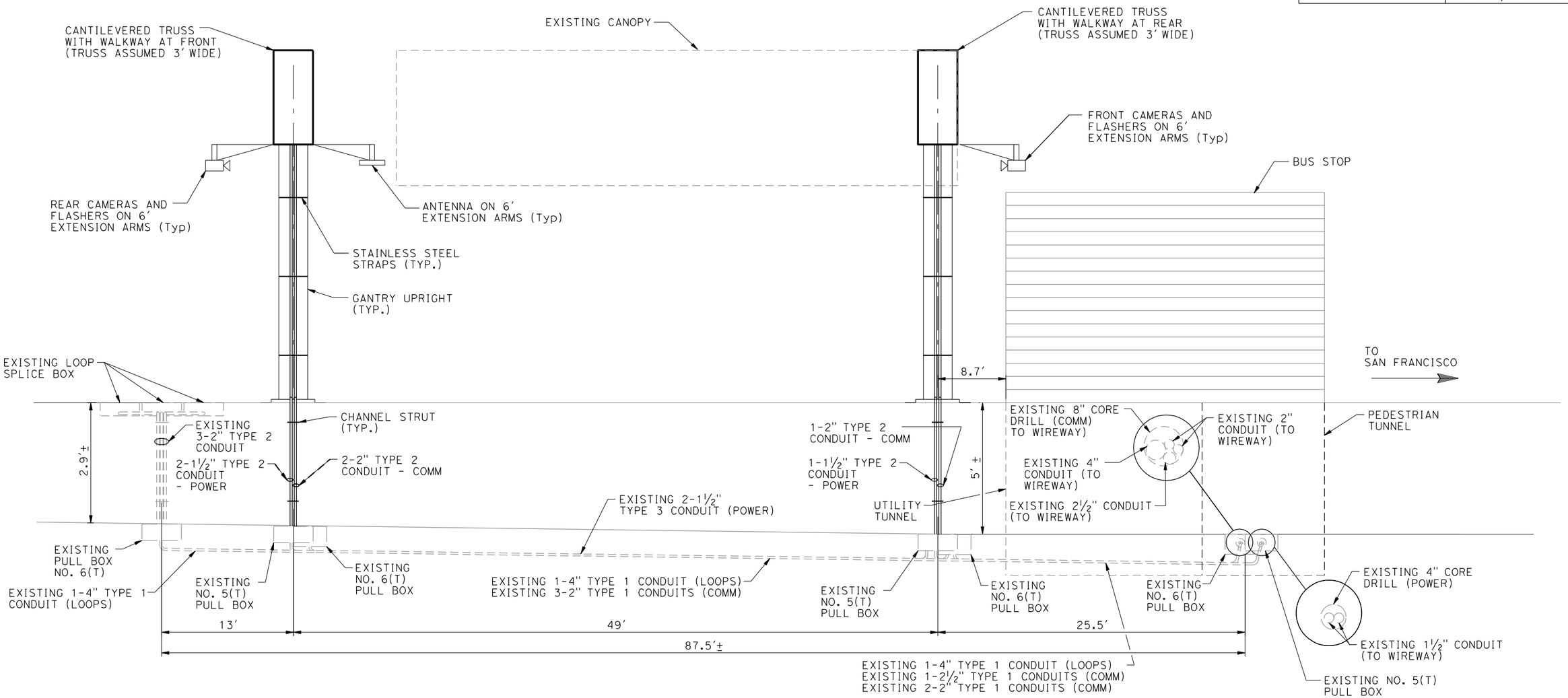

NOTES:

1. CONTRACTOR SHALL INSTALL ALL CONDUIT DOWN FACE OF RETAINING WALL ONCE ALL NECESSARY RETAINING WALL RESTORATION WORK HAS BEEN COMPLETED AS A RESULT OF GANTRY FOUNDATION INSTALLATION.

MISCELLANEOUS ELECTRICAL DETAILS (SECTION A-A RETAINING WALL CONDUIT ROUTING)

NO SCALE

THIS PLAN ACCURATE FOR ELECTRICAL WORK ONLY

E-5

REVISED BY | DATE REVISED
CALCULATED-DESIGNED BY | CHECKED BY
CONSULTANT FUNCTIONAL SUPERVISOR: LARRY JONES
STATE OF CALIFORNIA - DEPARTMENT OF TRANSPORTATION
Caltrans

LAST REVISION 00-00-00 | DATE PLOTTED => 6/8/2009 | TIME PLOTTED => 4:51:52 AM

Dist	COUNTY	ROUTE	POST MILES TOTAL PROJECT	SHEET No.	TOTAL SHEETS
04	Ala	80	1.8/2.1		

REGISTERED CIVIL ENGINEER DATE

PLANS APPROVAL DATE

REGISTERED PROFESSIONAL ENGINEER No. Exp. CIVIL STATE OF CALIFORNIA

THE STATE OF CALIFORNIA OR ITS OFFICERS OR AGENTS SHALL NOT BE RESPONSIBLE FOR THE ACCURACY OR COMPLETENESS OF SCANNED COPIES OF THIS PLAN SHEET.

BAY AREA TOLL AUTHORITY
101 EIGHTH STREET
OAKLAND, CA 94607

URS CORPORATION
55 SOUTH MARKET STREET
SUITE 1500
SAN JOSE, CA 95113-2332

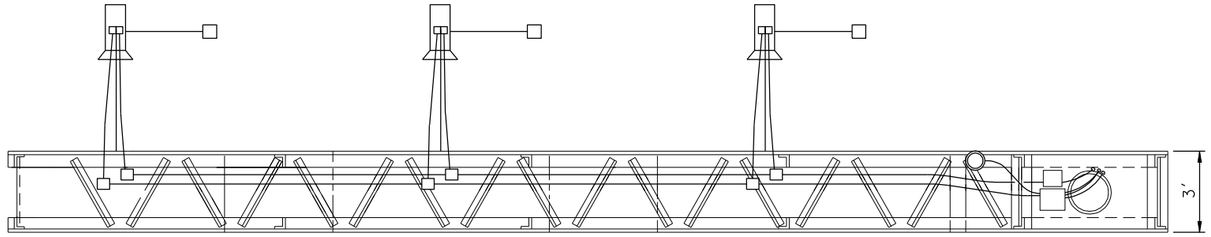

WEST GANTRY CONDUIT ROUTING

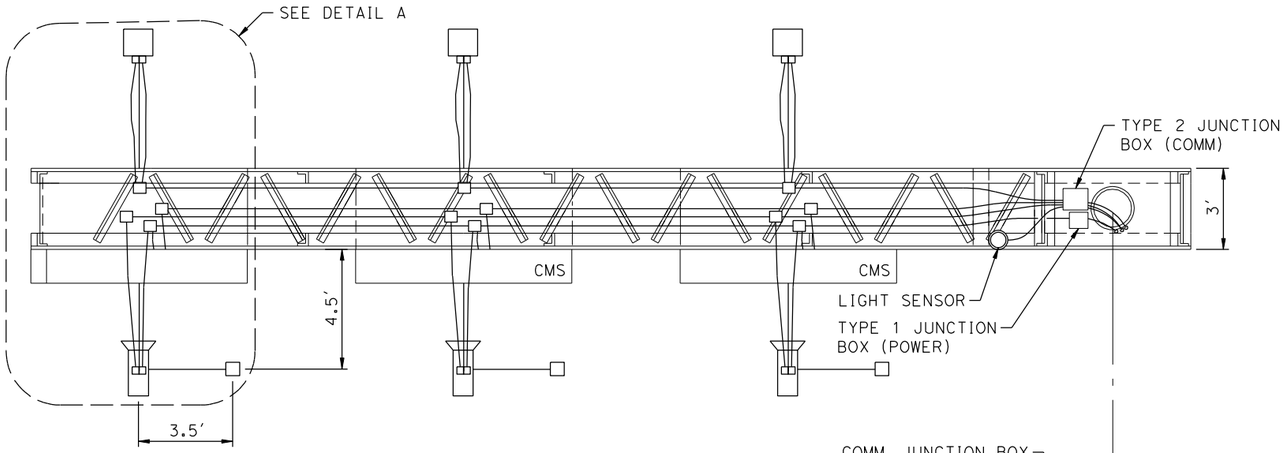

EAST GANTRY CONDUIT ROUTING

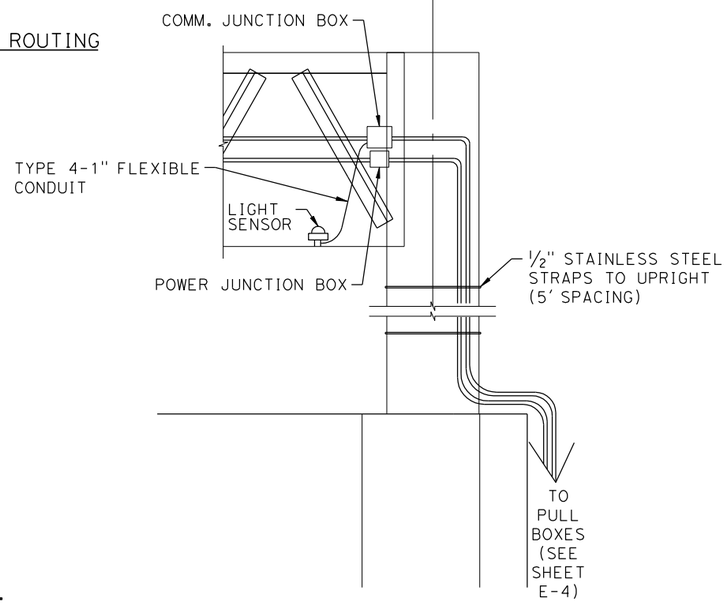

GANTRY ELEVATION VIEW

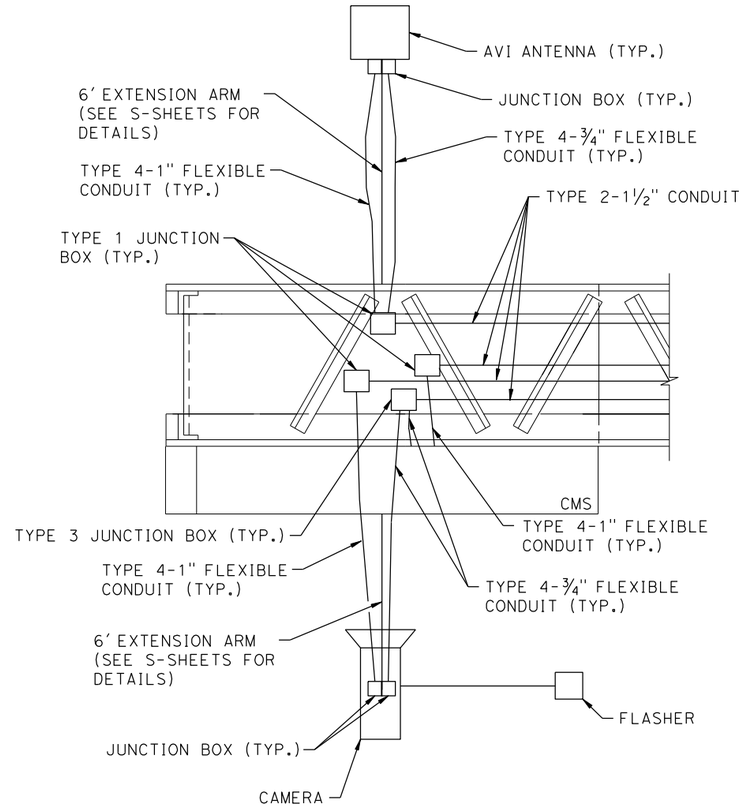

DETAIL A

NOTES:

1. INSTALLATION OF ALL ORT TOLL EQUIPMENT AND ASSOCIATED CABLING WILL BE PROVIDED BY OTHERS.
2. ALL CONDUIT AND JUNCTION BOXES SHALL BE FASTENED TO STRUCTURAL MEMBERS AND EXTENSION ARMS USING STAINLESS STEEL STRAPS AND BEAM CLAMPS (SPACED AT 5' MAX.) OR AS REQUIRED.
3. CONTRACTOR TO INSTALL 2" TYPE 2 THREADED CONDUIT FOR MOUNTING LIGHT SENSORS SECURED TO THE GANTRY STRUCTURES.
4. CONTRACTOR TO INSTALL ALL REQUIRED AND NECESSARY CONDUIT FITTINGS AND ACCESS PANELS FOR ROUTING OF CABLE FOR THE LIGHT SENSORS.
5. JUNCTION BOXES ON EXTENSION ARMS SHALL BE SIZED AS NEEDED FOR APPLICATION TO BE REVIEWED AND APPROVED BY THE ENGINEER.

MISCELLANEOUS ELECTRICAL DETAILS (GANTRY CONDUIT ROUTING)

NO SCALE

THIS PLAN ACCURATE FOR ELECTRICAL WORK ONLY

E-6

STATE OF CALIFORNIA - DEPARTMENT OF TRANSPORTATION

Caltrans

CONSULTANT FUNCTIONAL SUPERVISOR: LARRY JONES

CALCULATED-DESIGNED BY | CHECKED BY | REVISED BY | DATE REVISED

LAST REVISION 00-00-00 | DATE PLOTTED => 6/8/2009 | TIME PLOTTED => 4:51:55 AM

Dist	COUNTY	ROUTE	POST MILES TOTAL PROJECT	SHEET No.	TOTAL SHEETS
04	Ala	80	1.8/2.1		

REGISTERED CIVIL ENGINEER DATE

PLANS APPROVAL DATE

REGISTERED PROFESSIONAL ENGINEER No. Exp. CIVIL STATE OF CALIFORNIA

THE STATE OF CALIFORNIA OR ITS OFFICERS OR AGENTS SHALL NOT BE RESPONSIBLE FOR THE ACCURACY OR COMPLETENESS OF SCANNED COPIES OF THIS PLAN SHEET.

BAY AREA TOLL AUTHORITY
101 EIGHTH STREET
OAKLAND, CA 94607

URS CORPORATION
55 SOUTH MARKET STREET
SUITE 1500
SAN JOSE, CA 95113-2332

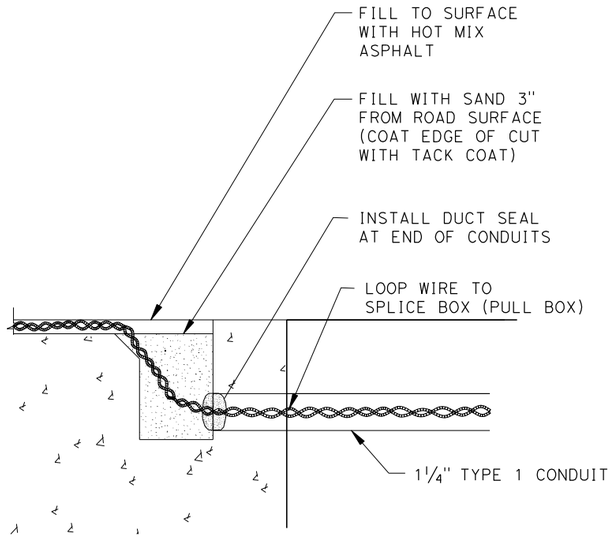

DETAIL B

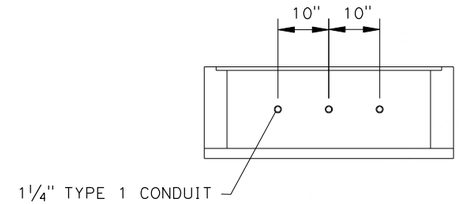

SECTION C-C

NOTES:

1. LOOP WIRE TO TERMINATE TO BELDEN 8720 CABLE IN LOOP WIRE SPLICE BOX.
2. AFTER LOOP WIRE IS PULLED THROUGH LOOP SPLICE BOX CONDUIT SEAL END WITH DUCT SEAL.
3. FILL EXCAVATED AREA WITH LOOP SEALANT MIX.
4. MAINTAIN MINIMUM 10" SPACING BETWEEN LOOP SPLICE BOX CONDUITS.
5. ALL UNUSED CONDUIT ENDS SHALL BE CAPPED TO PREVENT INTRUSION OF WATER, DIRT, ETC.

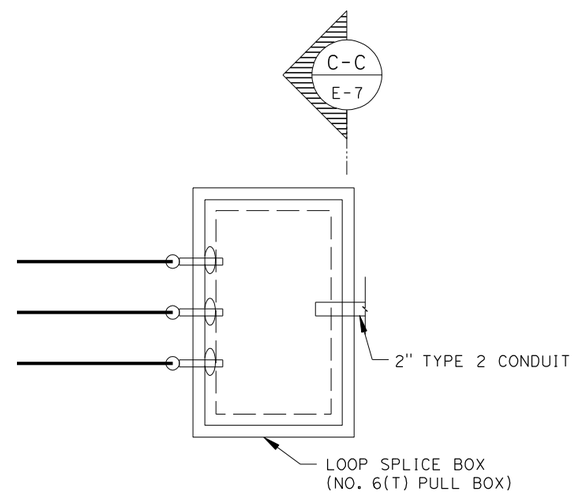

PLAN VIEW

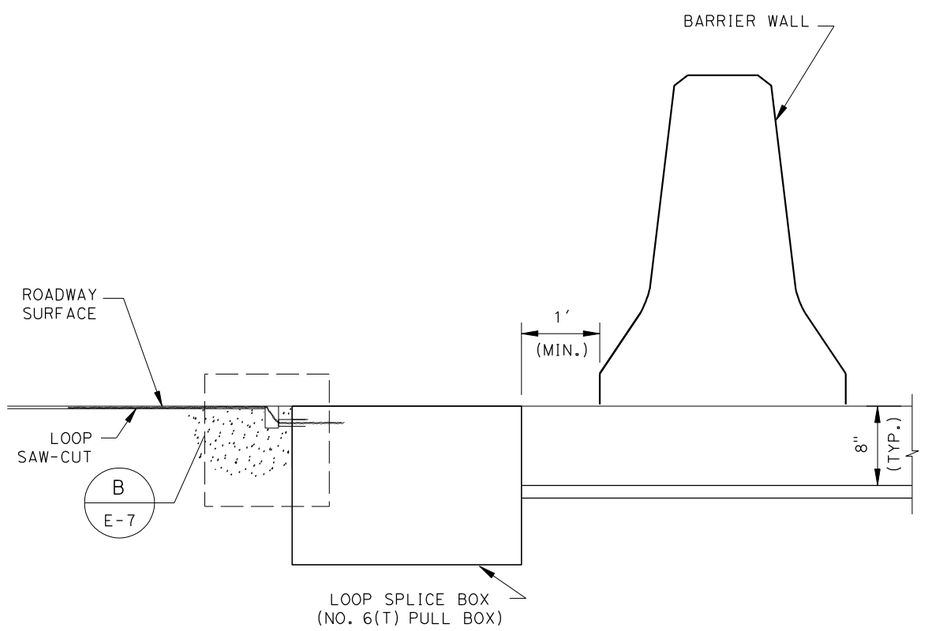

ELEVATION VIEW

MISCELLANEOUS ELECTRICAL DETAILS (LOOP SPLICE BOX)

E-7

THIS PLAN ACCURATE FOR ELECTRICAL WORK ONLY

REVISED BY | DATE REVISED

CALCULATED-DESIGNED BY | CHECKED BY

CONSULTANT FUNCTIONAL SUPERVISOR: LARRY JONES

STATE OF CALIFORNIA - DEPARTMENT OF TRANSPORTATION

Caltrans

LAST REVISION 00-00-00 | DATE PLOTTED => 6/8/2009 TIME PLOTTED => 4:51:59 AM

Dist	COUNTY	ROUTE	POST MILES TOTAL PROJECT	SHEET No.	TOTAL SHEETS
04	Ala	80	1.8/2.1		

REGISTERED CIVIL ENGINEER DATE

PLANS APPROVAL DATE

REGISTERED PROFESSIONAL ENGINEER No. Exp. CIVIL STATE OF CALIFORNIA

THE STATE OF CALIFORNIA OR ITS OFFICERS OR AGENTS SHALL NOT BE RESPONSIBLE FOR THE ACCURACY OR COMPLETENESS OF SCANNED COPIES OF THIS PLAN SHEET.

BAY AREA TOLL AUTHORITY
101 EIGHTH STREET
OAKLAND, CA 94607

URS CORPORATION
55 SOUTH MARKET STREET
SUITE 1500
SAN JOSE, CA 95113-2332

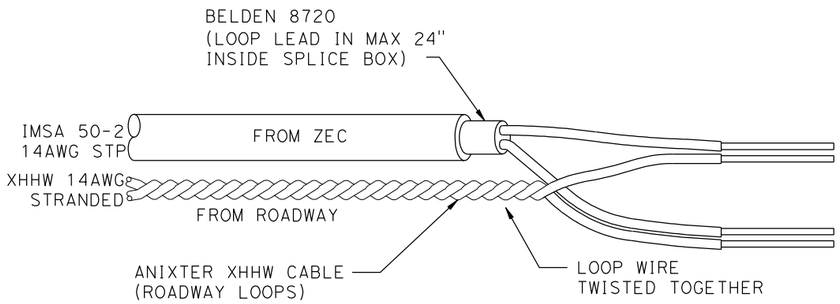

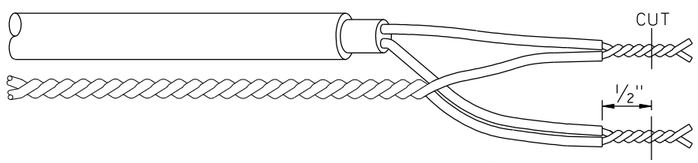

WIRES SHOULD BE TWISTED AND CUT

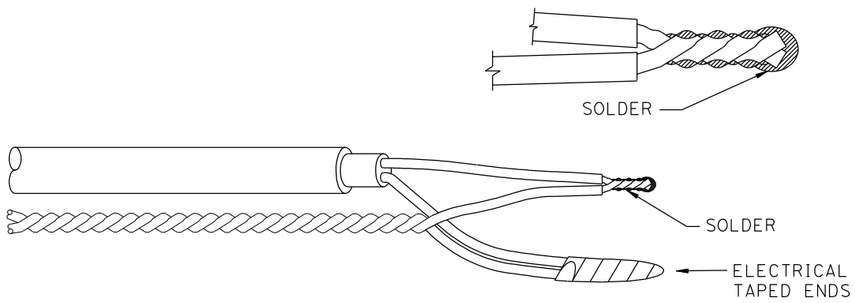

WIRES SHOULD BE SOLDERED AND TAPPED

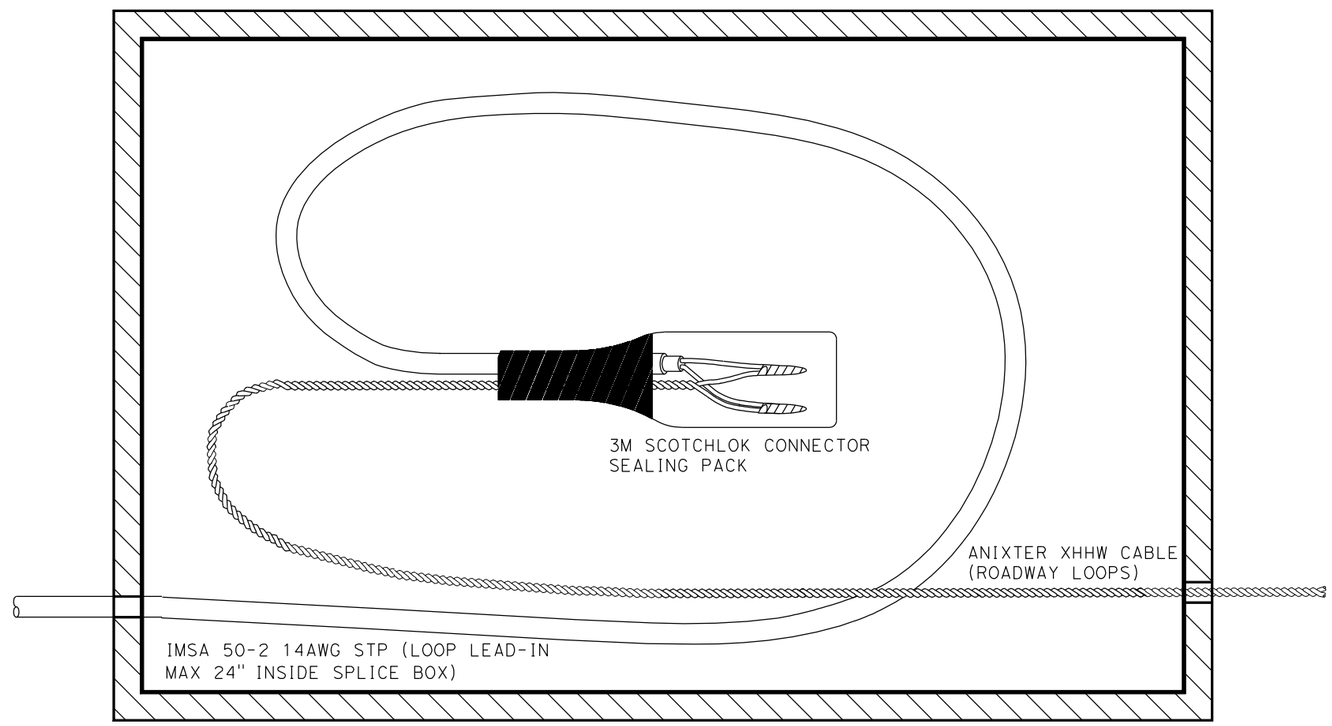

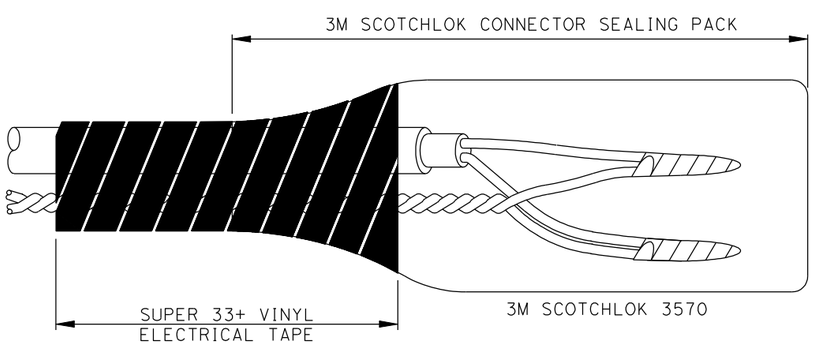

MISCELLANEOUS ELECTRICAL DETAILS (LOOP SPLICE DETAILS)

NO SCALE

E-8

THIS PLAN ACCURATE FOR ELECTRICAL WORK ONLY

REVISED BY | DATE REVISED

CALCULATED-DESIGNED BY | CHECKED BY

CONSULTANT FUNCTIONAL SUPERVISOR: LARRY JONES

STATE OF CALIFORNIA - DEPARTMENT OF TRANSPORTATION

Caltrans

LAST REVISION 00-00-00 | DATE PLOTTED => 6/8/2009 | TIME PLOTTED => 4:52:02 AM

Dist	COUNTY	ROUTE	POST MILES TOTAL PROJECT	SHEET No.	TOTAL SHEETS
04	Ala	80	1.8/2.1		

REGISTERED CIVIL ENGINEER DATE

PLANS APPROVAL DATE

REGISTERED PROFESSIONAL ENGINEER No. Exp. CIVIL STATE OF CALIFORNIA

THE STATE OF CALIFORNIA OR ITS OFFICERS OR AGENTS SHALL NOT BE RESPONSIBLE FOR THE ACCURACY OR COMPLETENESS OF SCANNED COPIES OF THIS PLAN SHEET.

BAY AREA TOLL AUTHORITY
101 EIGHTH STREET
OAKLAND, CA 94607

URS CORPORATION
55 SOUTH MARKET STREET
SUITE 1500
SAN JOSE, CA 95113-2332

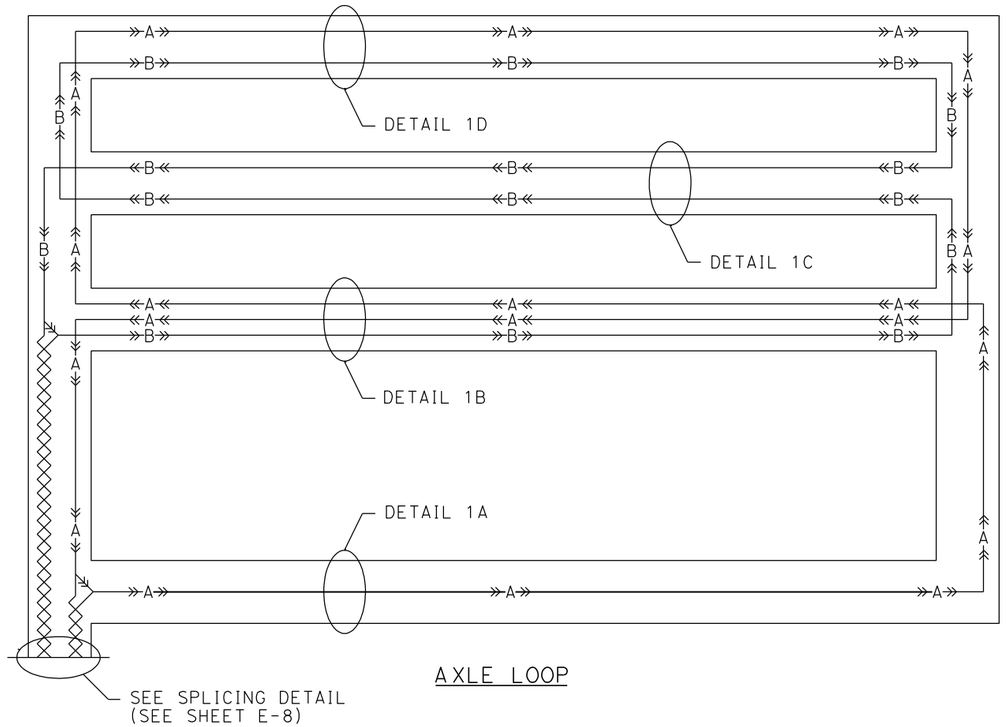

AXLE LOOP

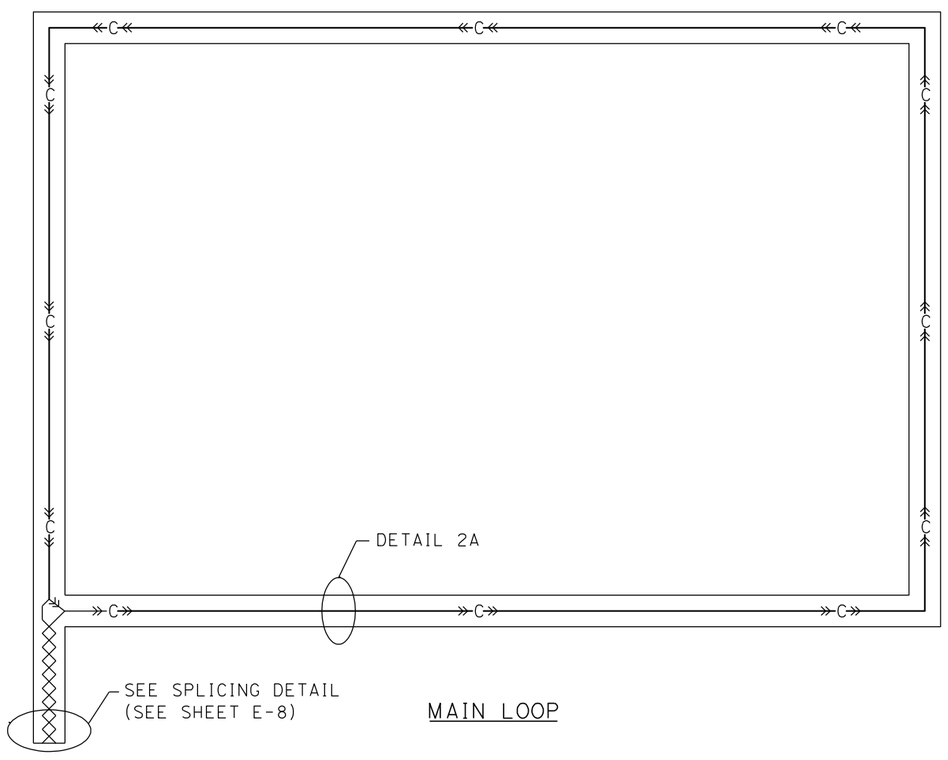

MAIN LOOP

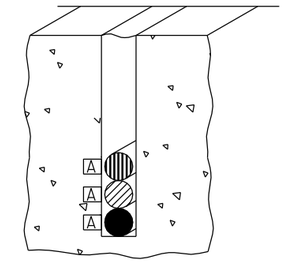

DETAIL 1A

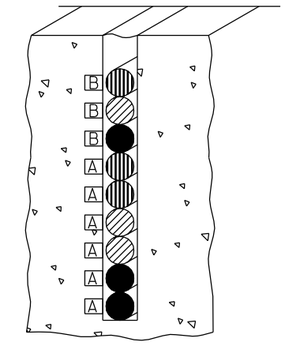

DETAIL 1B

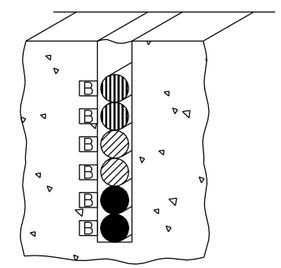

DETAIL 1C

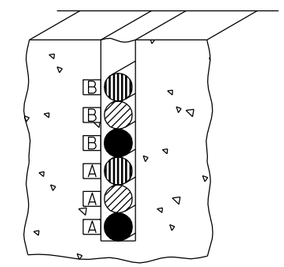

DETAIL 1D

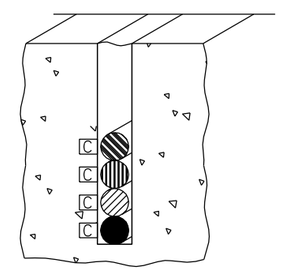

DETAIL 2A

X		-FOURTH TURN OF LOOP
X		-THIRD TURN OF LOOP
X		-SECOND TURN OF LOOP
X		-FIRST TURN OF LOOP

LOOP WIRE WRAPPING

MISCELLANEOUS ELECTRICAL DETAILS (LOOP WRAPPING DETAILS)

NO SCALE

THIS PLAN ACCURATE FOR ELECTRICAL WORK ONLY

E-9

REVISED BY | DATE REVISED

CALCULATED-DESIGNED BY | CHECKED BY

CONSULTANT FUNCTIONAL SUPERVISOR: LARRY JONES

STATE OF CALIFORNIA - DEPARTMENT OF TRANSPORTATION

Caltrans

LAST REVISION 00-00-00 | DATE PLOTTED => 6/8/2009 | TIME PLOTTED => 4:52:07 AM

Dist	COUNTY	ROUTE	POST MILES TOTAL PROJECT	SHEET No.	TOTAL SHEETS
04	Ala	80	1.8/2.1		

REGISTERED CIVIL ENGINEER DATE

PLANS APPROVAL DATE

REGISTERED PROFESSIONAL ENGINEER No. Exp. CIVIL STATE OF CALIFORNIA

THE STATE OF CALIFORNIA OR ITS OFFICERS OR AGENTS SHALL NOT BE RESPONSIBLE FOR THE ACCURACY OR COMPLETENESS OF SCANNED COPIES OF THIS PLAN SHEET.

BAY AREA TOLL AUTHORITY
101 EIGHTH STREET
OAKLAND, CA 94607

URS CORPORATION
55 SOUTH MARKET STREET
SUITE 1500
SAN JOSE, CA 95113-2332

ABBREVIATIONS

FO= FIBER OPTIC

TVSS= TRANSIENT VOLTAGE SURGE SUPPRESSOR

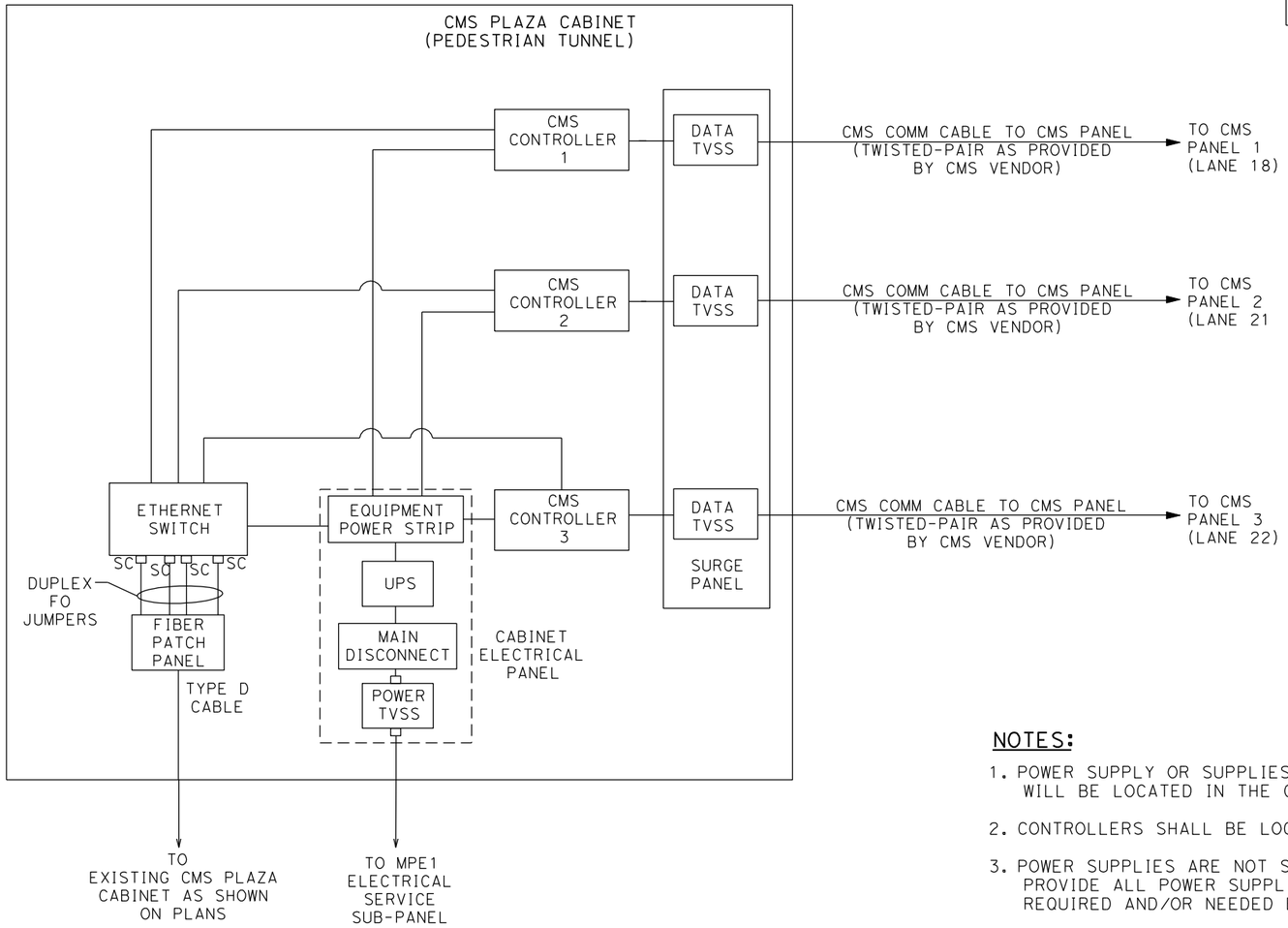

DETAIL A: CMS PLAZA CABINET WIRING SCHEMATIC

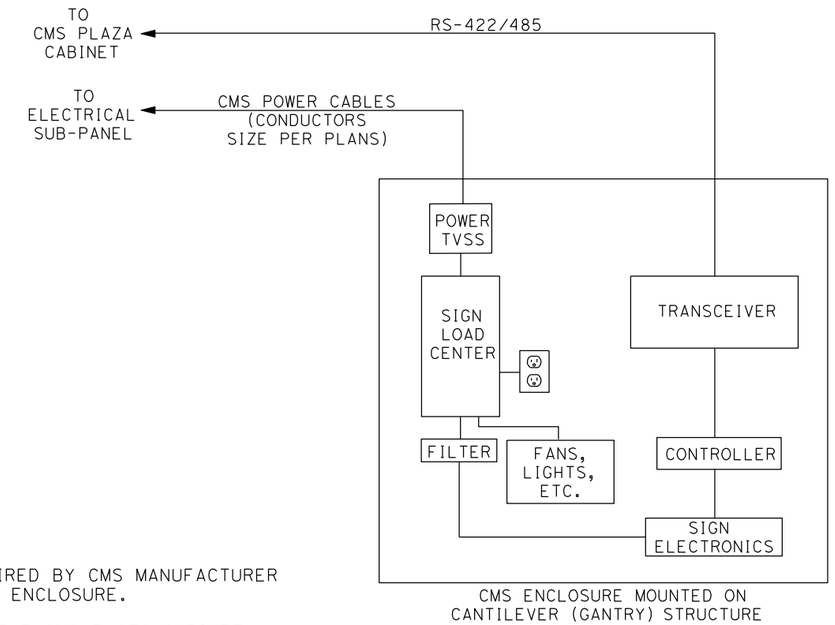

DETAIL B: TYPICAL CMS PANEL

NOTES:

1. POWER SUPPLY OR SUPPLIES AS REQUIRED BY CMS MANUFACTURER WILL BE LOCATED IN THE CMS PANEL ENCLOSURE.
2. CONTROLLERS SHALL BE LOCATED IN THE CMS PLAZA CABINET.
3. POWER SUPPLIES ARE NOT SHOWN FOR CLARITY. CONTRACTOR TO PROVIDE ALL POWER SUPPLIES AND ANCILLARY MATERIALS AS REQUIRED AND/OR NEEDED BY EQUIPMENT.
4. CMS PANELS AND CMS COMM CABLES TO BE PROVIDED BY CMS MANUFACTURER. CONTRACTOR TO COORDINATE WITH THE ENGINEER AND CMS MANUFACTURER.

MISCELLANEOUS ELECTRICAL DETAILS (CMS SYSTEM SCHEMATIC)

NO SCALE

E-10

THIS PLAN ACCURATE FOR ELECTRICAL WORK ONLY

STATE OF CALIFORNIA - DEPARTMENT OF TRANSPORTATION

Caltrans

CONSULTANT FUNCTIONAL SUPERVISOR: LARRY JONES

CALCULATED-DESIGNED BY | CHECKED BY

REVISED BY | DATE REVISED

LAST REVISION 00-00-00 | DATE PLOTTED => 6/8/2009 | TIME PLOTTED => 4:52:09 AM

Dist	COUNTY	ROUTE	POST MILES TOTAL PROJECT	SHEET No.	TOTAL SHEETS
04	Ala	80	1.8/2.1		

REGISTERED CIVIL ENGINEER DATE

PLANS APPROVAL DATE

REGISTERED PROFESSIONAL ENGINEER No. Exp. CIVIL STATE OF CALIFORNIA

THE STATE OF CALIFORNIA OR ITS OFFICERS OR AGENTS SHALL NOT BE RESPONSIBLE FOR THE ACCURACY OR COMPLETENESS OF SCANNED COPIES OF THIS PLAN SHEET.

BAY AREA TOLL AUTHORITY
101 EIGHTH STREET
OAKLAND, CA 94607

URS CORPORATION
55 SOUTH MARKET STREET
SUITE 1500
SAN JOSE, CA 95113-2332

FIBER COLOR STANDARD

AQ	AQUA	RD	RED
BK	BLACK	RS	ROSE
BL	BLUE	SL	SLATE
BR	BROWN	VI	VIOLET
GR	GREEN	WH	WHITE
OR	ORANGE	YL	YELLOW

LEGEND

- # — FO ENCLOSURE # DETAIL NUMBER
- FO BUFFER
- FO FIBER
- FUSION SPLICE
- UNTERMINATED FIBER(S) OR BUFFER(S)
- TERMINATED FIBERS (SC CONNECTOR)

X - TERMINATED ACTIVE
O - TERMINATED SPARE

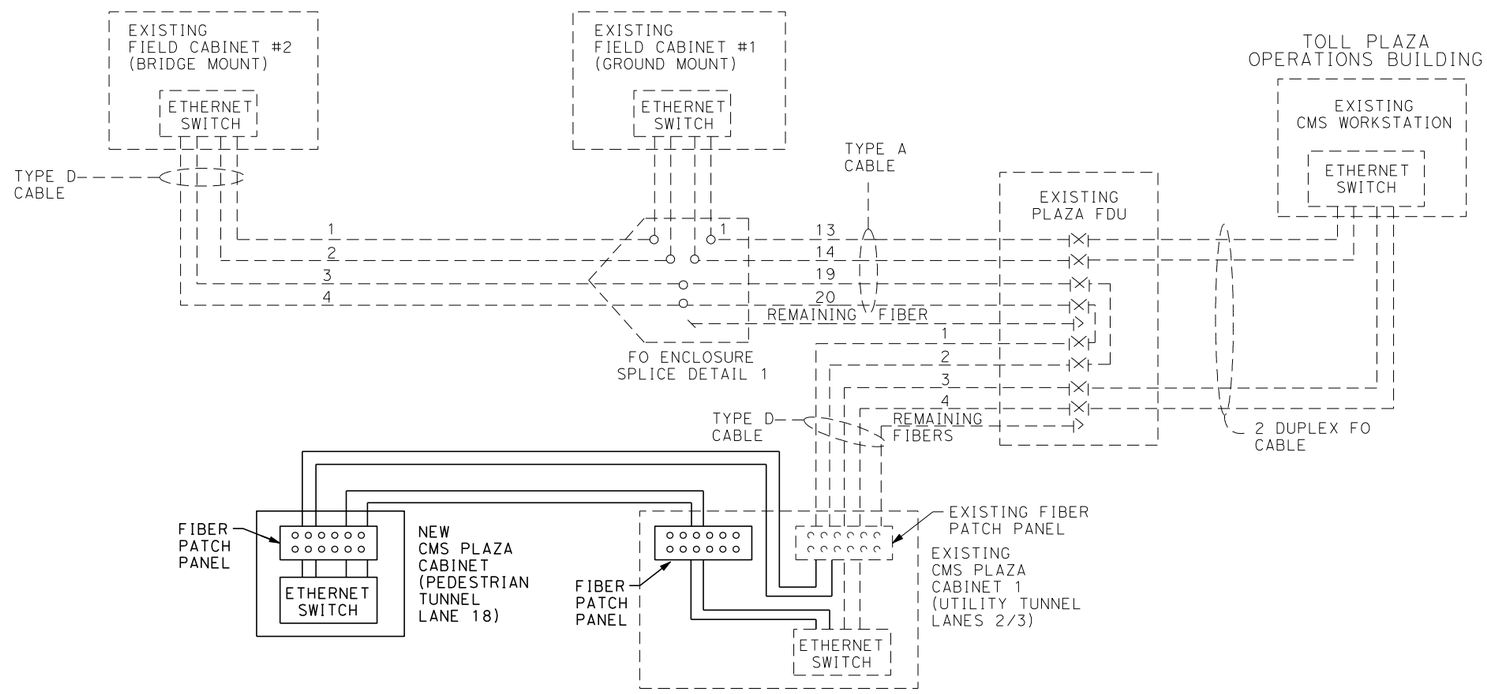

MISCELLANEOUS ELECTRICAL DETAILS (CMS SYSTEM FIBER ASSIGNMENT)

NO SCALE

THIS PLAN ACCURATE FOR ELECTRICAL WORK ONLY

E-11

REVISED BY | DATE REVISED
CALCULATED-DESIGNED BY | CHECKED BY
CONSULTANT FUNCTIONAL SUPERVISOR: LARRY JONES
STATE OF CALIFORNIA - DEPARTMENT OF TRANSPORTATION
Caltrans

LAST REVISION 00-00-00 | DATE PLOTTED => 6/8/2009 | TIME PLOTTED => 4:52:12 AM

BORDER LAST REVISED 4/11/2008 | RELATIVE BORDER SCALE IS IN INCHES 0 1 2 3 | USERNAME=> FBT03 | DGN FILE=> c:\my projects\bryan\bata - ort cad files\submittal -- may 19-2009\Final 5_26_09\ElecDet03.dgn | CU 00000 | EA 0G420K

Dist	COUNTY	ROUTE	POST MILES TOTAL PROJECT	SHEET No.	TOTAL SHEETS
04	Ala	80	1.8/2.1		

REGISTERED CIVIL ENGINEER DATE

PLANS APPROVAL DATE

REGISTERED PROFESSIONAL ENGINEER No. Exp. CIVIL STATE OF CALIFORNIA

THE STATE OF CALIFORNIA OR ITS OFFICERS OR AGENTS SHALL NOT BE RESPONSIBLE FOR THE ACCURACY OR COMPLETENESS OF SCANNED COPIES OF THIS PLAN SHEET.

BAY AREA TOLL AUTHORITY
101 EIGHTH STREET
OAKLAND, CA 94607

URS CORPORATION
55 SOUTH MARKET STREET
SUITE 1500
SAN JOSE, CA 95113-2332

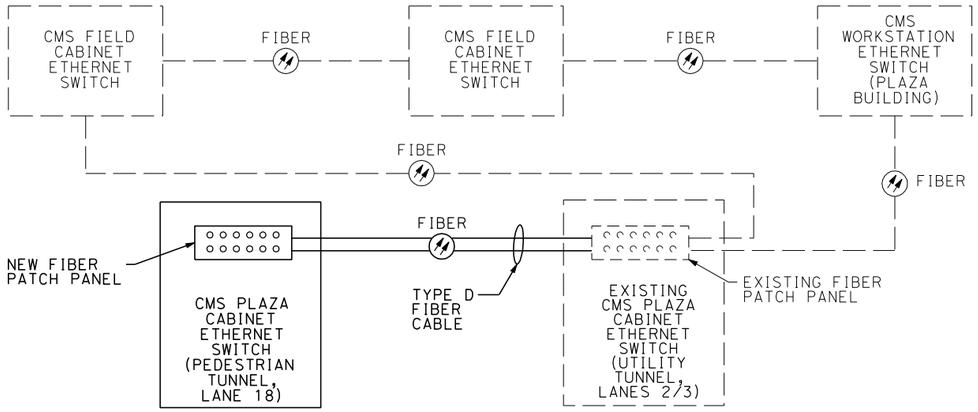

REVISED CMS SYSTEM ARCHITECTURE

TYPE D CABLE

FIBER No.	FIELD CABINET PATCH PANEL	TRUNK CABLE SPLICE BOX	REMARKS
1	X>	X>	ETHERNET TX PRIMARY
2	X>	X>	ETHERNET RX PRIMARY
3	X>	X>	ETHERNET TX PRIMARY
4	X>	X>	ETHERNET RX PRIMARY
5-12	O>	O>	FUTURE/SPARE

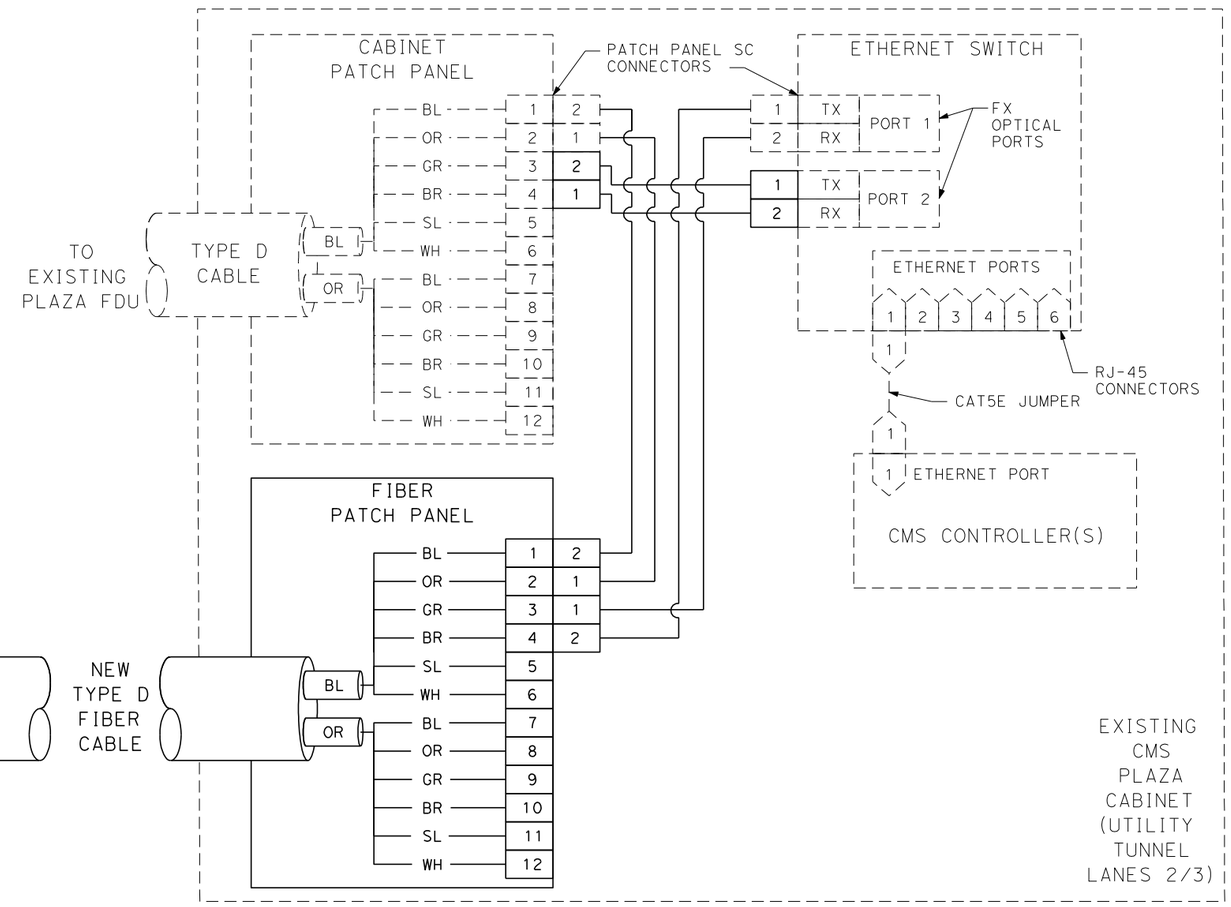

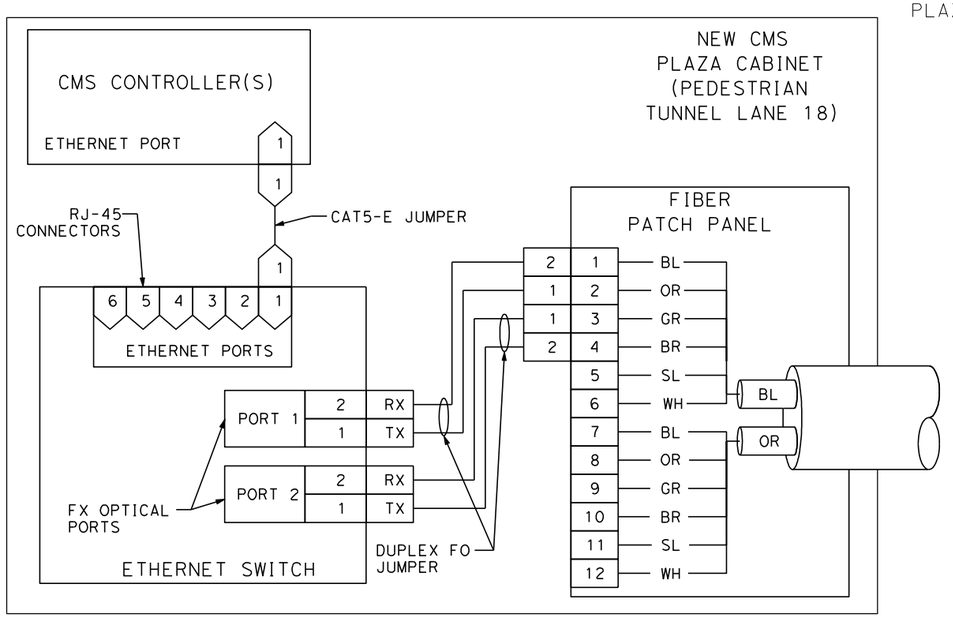

LEGEND:

X - TERMINATED ACTIVE

O - TERMINATED SPARE

<> - ARROW POINTS TO THE DIRECTION OF TRANSMISSION

NOTES:

1. CONTRACTOR SHALL COORDINATE CLOSELY WITH BATA ON RE-CONFIGURATION OF CMS ETHERNET SWITCHES AND NETWORK OPERATIONS.

MISCELLANEOUS ELECTRICAL DETAILS (CMS SYSTEM NETWORK DETAILS)

NO SCALE

THIS PLAN ACCURATE FOR ELECTRICAL WORK ONLY

E-12

REVISED BY | DATE REVISED | CALCULATED-DESIGNED BY | CHECKED BY | CONSULTANT FUNCTIONAL SUPERVISOR: LARRY JONES

STATE OF CALIFORNIA - DEPARTMENT OF TRANSPORTATION

LAST REVISION 00-00-00 | DATE PLOTTED => 6/8/2009 | TIME PLOTTED => 4:52:14 AM

Dist	COUNTY	ROUTE	POST MILES TOTAL PROJECT	SHEET No.	TOTAL SHEETS
04	Ala	80	1.8/2.1		

REGISTERED CIVIL ENGINEER DATE

PLANS APPROVAL DATE

REGISTERED PROFESSIONAL ENGINEER No. Exp. CIVIL STATE OF CALIFORNIA

THE STATE OF CALIFORNIA OR ITS OFFICERS OR AGENTS SHALL NOT BE RESPONSIBLE FOR THE ACCURACY OR COMPLETENESS OF SCANNED COPIES OF THIS PLAN SHEET.

BAY AREA TOLL AUTHORITY
101 EIGHTH STREET
OAKLAND, CA 94607

URS CORPORATION
55 SOUTH MARKET STREET
SUITE 1500
SAN JOSE, CA 95113-2332

ITEM	COMPONENT
BC	CABINET BREAKER, 5 AMP
BE	EQUIPMENT BREAKER, 10 AMP
BM	CABINET MAIN BREAKER, 20 AMP
BS	SERVICE BREAKER, 10 AMP
GB	GROUND BUS 14 POSITIONS
LAMP	CABINET LAMP
OE	EQUIPMENT OUTLET, QUAD, NEMA 5-15R
OS	SERVICE OUTLET, DUPLEX, NEMA 5-15R
SP	POWER LINE SURGE PROTECTION
SW1	FRONT DOOR SWITCH
TB1	TERMINAL BLOCK 3 POSITIONS, DUAL ROW
TB2	TERMINAL BLOCK 3 POSITIONS, DUAL ROW
TB3	TERMINAL BLOCK 3 POSITIONS, DUAL ROW
TB4	TERMINAL BLOCK 4 POSITIONS, DUAL ROW

PEDESTRIAN TUNNEL
(LANE 18)

ITEM	COMPONENT
1	CMS CONTROLLER
2	ETHERNET SWITCH
3	FIBER PATCH PANEL
4	POWER STRIP
5	UPS
6	ELECTRICAL PANEL
7	DATA TVSS
8	15 AMP GFI OUTLET

NOTE: CABINET AND EQUIPMENT TO MEET CALTRANS TEES REQUIREMENTS

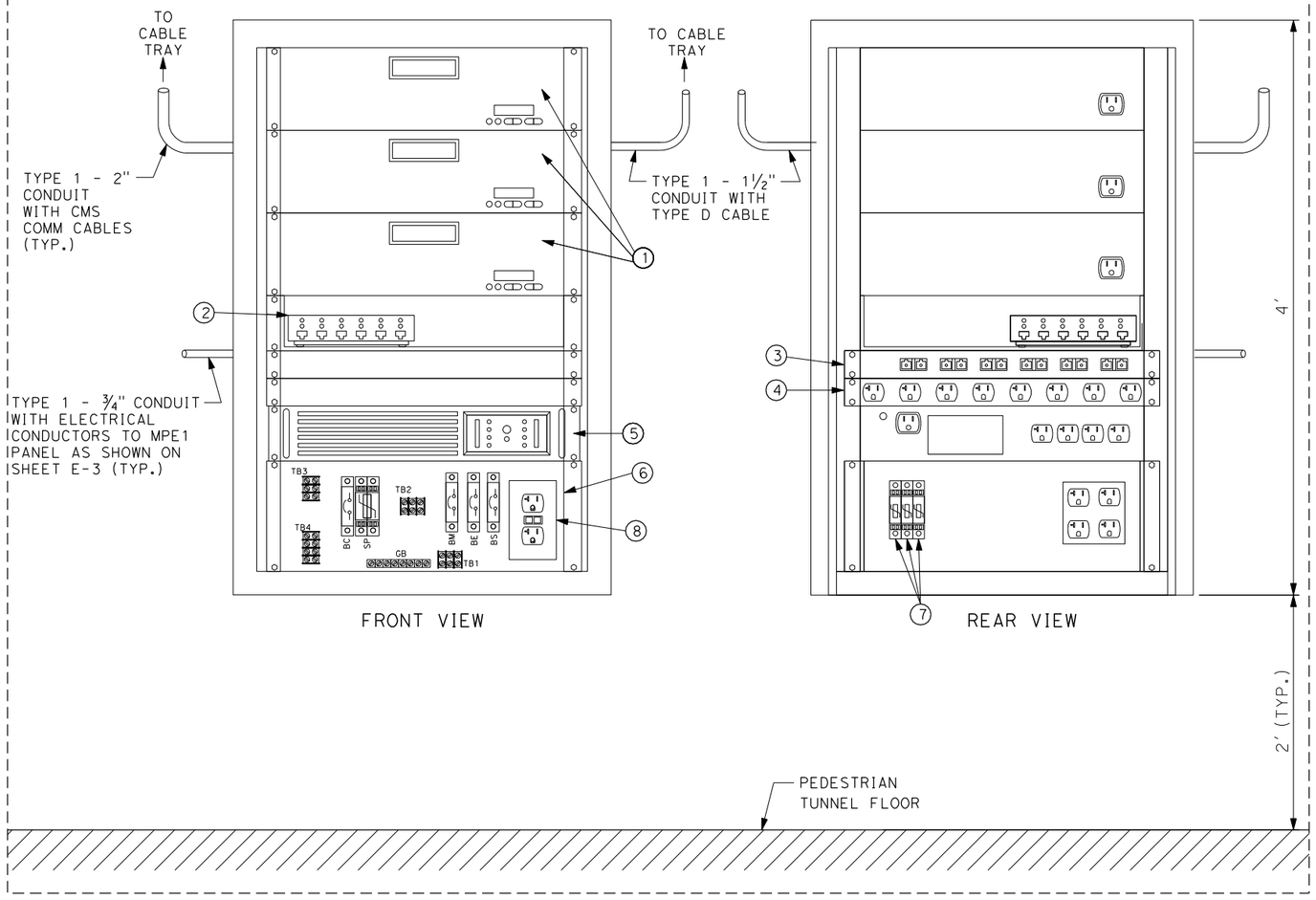

DETAIL A
CMS PLAZA CABINET ELEVATION

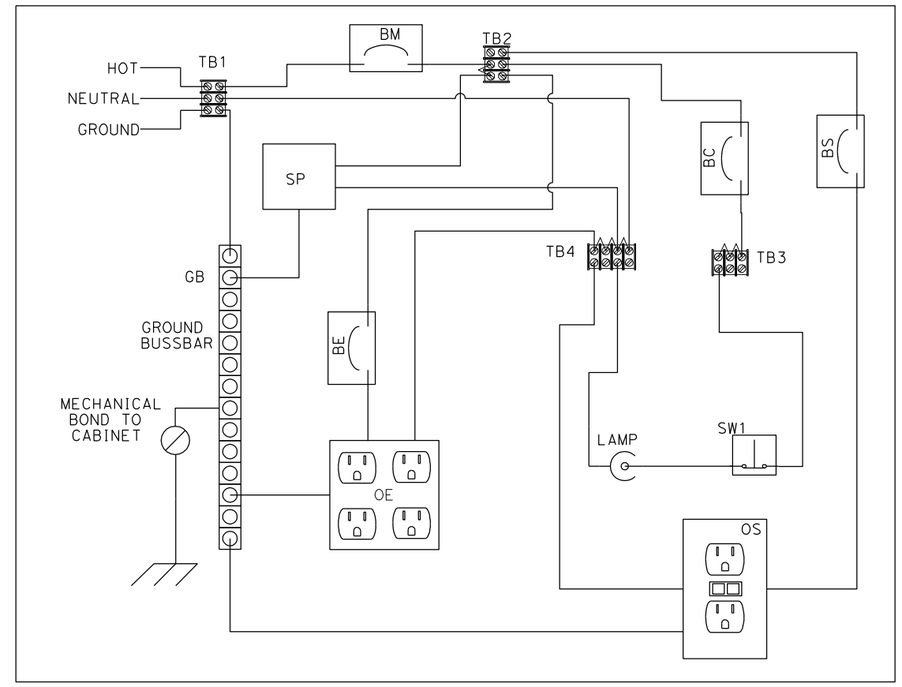

DETAIL B
CABINET ELECTRICAL WIRING DIAGRAM

NOTES:

1. CONTRACTOR HAS THE OPTION OF ROUTING CONDUITS FROM THE TOP AND/OR BOTTOM OF THE CABINETS.
2. INSTALL WEATHERPROOF LB FITTING OR CONDULET INTO CABINET.
3. ALL CABINET EQUIPMENT AND CONDUIT LOCATIONS SHOWN ON PLANS AND DETAILS ARE APPROXIMATE. FINAL LOCATION OF ALL EQUIPMENT AND MATERIALS SHALL BE AS DIRECTED AND APPROVED BY THE ENGINEER.
4. PLAZA CABINET MOUNTED TO A CONCRETE WALL SHALL BE ATTACHED TO THE WALL USING ⅜" DIAMETER EXPANSION ANCHORS, TOTAL 4 PER CABINET ATTACHED TO THE CONCRETE WALL. CONTRACTOR MAY PROPOSE AN ALTERNATIVE MOUNTING METHOD FOR APPROVAL BY ENGINEER.

THIS PLAN ACCURATE FOR ELECTRICAL WORK ONLY

MISCELLANEOUS ELECTRICAL DETAILS (CMS PLAZA CABINET WIRING)

NO SCALE

E-13

STATE OF CALIFORNIA - DEPARTMENT OF TRANSPORTATION
Caltrans

CONSULTANT FUNCTIONAL SUPERVISOR: LARRY JONES

CALCULATED-DESIGNED BY | CHECKED BY | REVISED BY | DATE REVISED

LAST REVISION 00-00-00 | DATE PLOTTED => 6/8/2009 | TIME PLOTTED => 4:52:18 AM

BORDER LAST REVISED 4/11/2008 | RELATIVE BORDER SCALE IS IN INCHES 0 1 2 3 | USERNAME=> FBT03 | DGN FILE=> c:\my projects\bryan\bata - ort cad files\submittal -- may 19-2009\Final 5_26_09\Elecdet05.dgn | CU 00000 | EA 0C420K

Dist	COUNTY	ROUTE	POST MILES TOTAL PROJECT	SHEET No.	TOTAL SHEETS
04	Ala	80	1.8/2.1		

REGISTERED CIVIL ENGINEER DATE

PLANS APPROVAL DATE

REGISTERED PROFESSIONAL ENGINEER No. Exp. CIVIL STATE OF CALIFORNIA

THE STATE OF CALIFORNIA OR ITS OFFICERS OR AGENTS SHALL NOT BE RESPONSIBLE FOR THE ACCURACY OR COMPLETENESS OF SCANNED COPIES OF THIS PLAN SHEET.

BAY AREA TOLL AUTHORITY
101 EIGHTH STREET
OAKLAND, CA 94607

URS CORPORATION
55 SOUTH MARKET STREET
SUITE 1500
SAN JOSE, CA 95113-2332

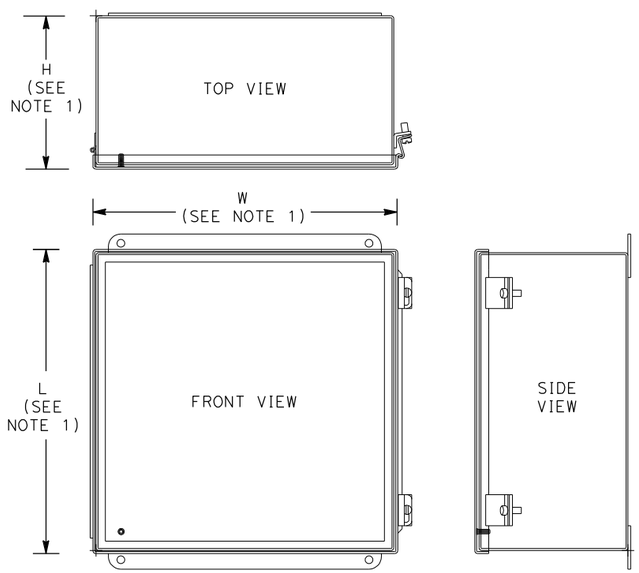

NEMA 4X JUNCTION BOX
(SHOWN WITH HINGE)

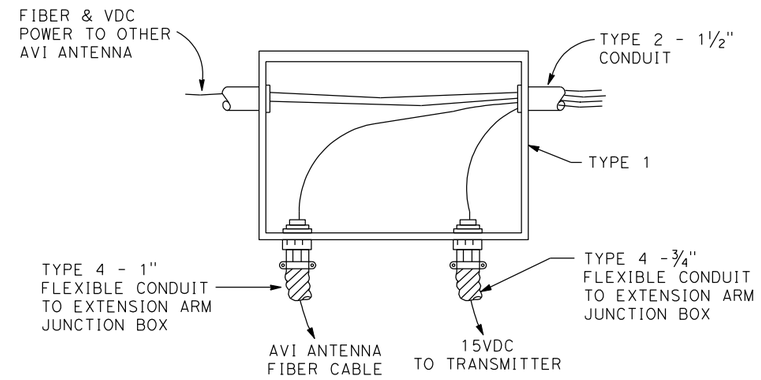

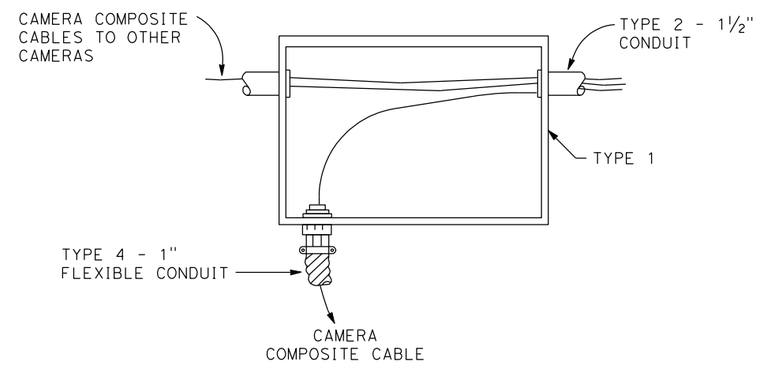

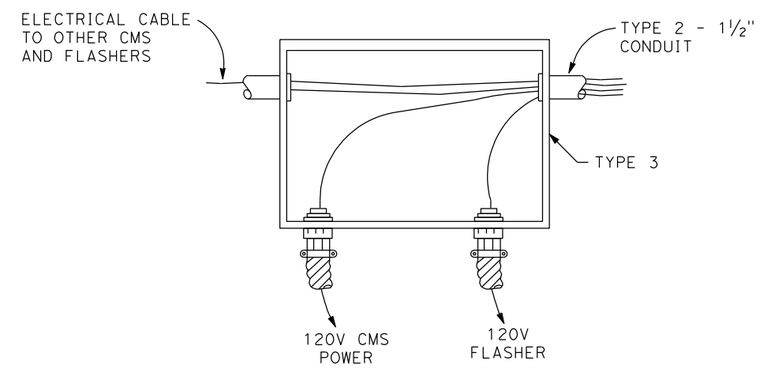

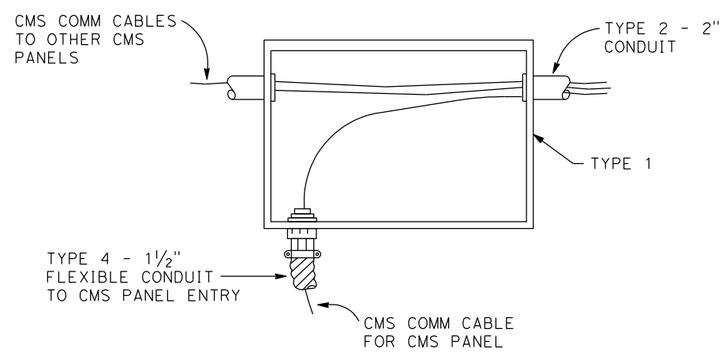

NOTES:

1. TYPE 1 JUNCTION BOX (12"L X 12"W X 6"D, TYP.) OR AS REQ'D.
   TYPE 2 JUNCTION BOX (20"L X 16"W X 10"D, TYP.) OR AS REQ'D.
   TYPE 3 JUNCTION BOX (5"L X 6"W X 4"D, TYP.) OR AS REQ'D.
2. MINIMUM SIZES OF JUNCTION BOXES SHOWN. CONTRACTOR SHALL CONFIRM SIZES AND QUANTITES IN FIELD AND SUBMIT SHOP DRAWINGS TO ENGINEER FOR APPROVAL.
3. FOR JUNCTION BOX MOUNTED ON EXISTING CONCRETE WALLS OR SURFACE FLOR MOUNTED USE ⅜" EXPANSION ANCHORS, TOTAL OF 4 FOR EACH BOX.
4. COIL A MINIMUM OF 3' OF CABLE FOR EACH DEVICE IN THE TYPE 1 AND TYPE 2 JUNCTION BOXES.

MISCELLANEOUS ELECTRICAL DETAILS (JUNCTION BOX)

NO SCALE

THIS PLAN ACCURATE FOR ELECTRICAL WORK ONLY

E-14

REVISED BY | DATE REVISED

CALCULATED-DESIGNED BY | CHECKED BY

CONSULTANT FUNCTIONAL SUPERVISOR: LARRY JONES

STATE OF CALIFORNIA - DEPARTMENT OF TRANSPORTATION

Caltrans

LAST REVISION 00-00-00 | DATE PLOTTED => 6/8/2009 | TIME PLOTTED => 4:52:21 AM

Dist	COUNTY	ROUTE	POST MILES TOTAL PROJECT	SHEET No.	TOTAL SHEETS
04	Ala	80	1.8/2.1		

REGISTERED CIVIL ENGINEER DATE

PLANS APPROVAL DATE

REGISTERED PROFESSIONAL ENGINEER No. Exp. CIVIL STATE OF CALIFORNIA

THE STATE OF CALIFORNIA OR ITS OFFICERS OR AGENTS SHALL NOT BE RESPONSIBLE FOR THE ACCURACY OR COMPLETENESS OF SCANNED COPIES OF THIS PLAN SHEET.

BAY AREA TOLL AUTHORITY
101 EIGHTH STREET
OAKLAND, CA 94607

URS CORPORATION
55 SOUTH MARKET STREET
SUITE 1500
SAN JOSE, CA 95113-2332

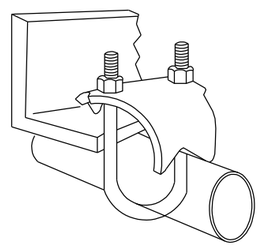

FOR MOUNTING PIPES OR CONDUIT AT RIGHT ANGLES TO THE BEAM DETAIL

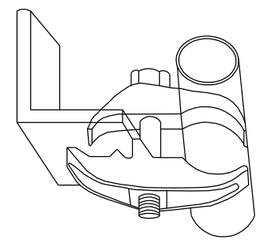

FOR MOUNTING PIPES OR CONDUIT PARALLEL TO THE BEAM DETAIL

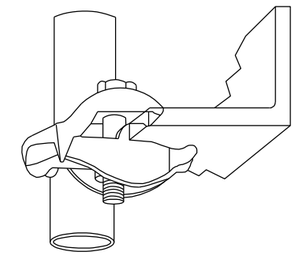

FOR MOUNTING PIPES OR CONDUIT VERTICALLY ACROSS BEAM EDGE DETAIL

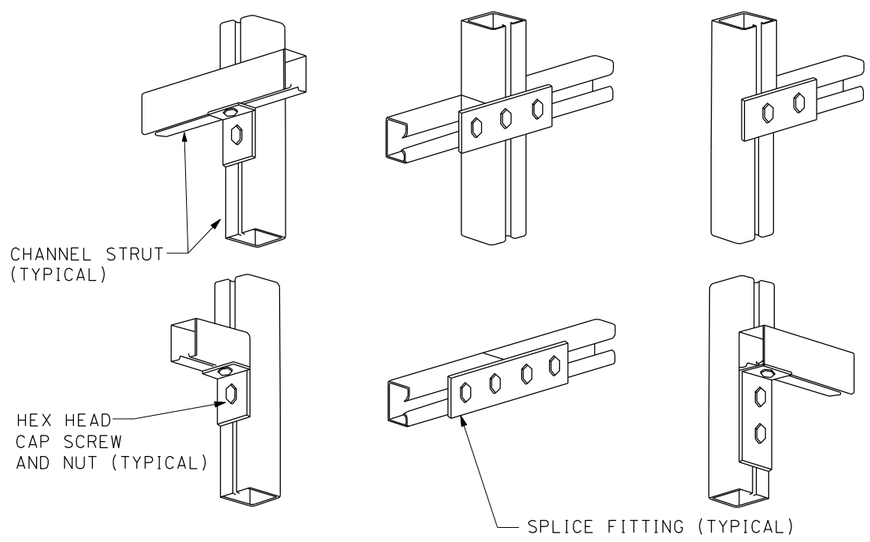

TYPICAL EQUIPMENT SUPPORT CHANNEL, FITTINGS AND FASTERERS

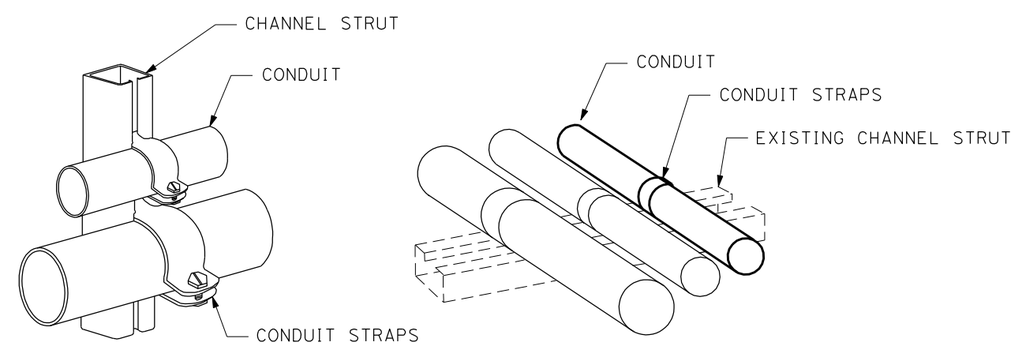

MOUNTING ON STRUT DETAILS

MISCELLANEOUS ELECTRICAL DETAILS (CONDUIT MOUNTING AND ATTACHMENT DETAILS)

E-15

THIS PLAN ACCURATE FOR ELECTRICAL WORK ONLY

STATE OF CALIFORNIA - DEPARTMENT OF TRANSPORTATION
Caltrans

CONSULTANT FUNCTIONAL SUPERVISOR: LARRY JONES

CALCULATED-DESIGNED BY
CHECKED BY

REVISED BY
DATE REVISED

LAST REVISION 00-00-00
DATE PLOTTED => 6/8/2009
TIME PLOTTED => 4:52:23 AM

Dist	COUNTY	ROUTE	POST MILES TOTAL PROJECT	SHEET No.	TOTAL SHEETS
04	Ala	80	1.8/2.1		

REGISTERED CIVIL ENGINEER DATE

PLANS APPROVAL DATE

REGISTERED PROFESSIONAL ENGINEER No. Exp. CIVIL STATE OF CALIFORNIA

THE STATE OF CALIFORNIA OR ITS OFFICERS OR AGENTS SHALL NOT BE RESPONSIBLE FOR THE ACCURACY OR COMPLETENESS OF SCANNED COPIES OF THIS PLAN SHEET.

BAY AREA TOLL AUTHORITY
101 EIGHTH STREET
OAKLAND, CA 94607

URS CORPORATION
55 SOUTH MARKET STREET
SUITE 1500
SAN JOSE, CA 95113-2332

DIMENSION TABLE

PULL BOX	CONCRETE BOX						NON-PCC BOX		CONCRETE OR NON-PCC COVERS				
	MINIMUM * THICKNESS	MINIMUM DEPTH BOX AND EXTENSION	WO	LO	L1	W1	MINIMUM ** THICKNESS	MINIMUM DEPTH BOX AND EXTENSION	L **	W **	R	EDGE THICKNESS	EDGE TAPER
NO. 5(T)	1 3/4"	12"	24" *	30" *	19" *	13" *	DOES NOT APPLY		27" *	16" *	0	1/2"	NONE
NO. 6(T)	2"	12"	30" *	36" *	24" *	17" *	DOES NOT APPLY		33" *	20" *	0	1/2"	NONE

* EXCLUDING CONDUIT WEB ** TOP DIMENSION

NOTES:

1. COMMUNICATION PULL BOX SHALL BE PROVIDED WITH STEEL COVER AND SPECIAL CONCRETE FOOTING. STEEL COVER SHALL HAVE EMBOSSED NON-SKID PATTERN.
2. STEEL REINFORCING SHALL BE AS REGULARLY USED IN THE STANDARD PRODUCTS OF THE RESPECTIVE MANUFACTURER.
3. TOP OF PULL BOXES SHALL BE FLUSH WITH SURROUNDING GRADE OR TOP OF ADJACENT CURB, EXCEPT THAT IN UNPAVED AREAS WHERE PULL BOX IS NOT IMMEDIATELY ADJACENT TO AND PROTECTED BY A CONCRETE FOUNDATION, POLE OR OTHER PROTECTIVE CONSTRUCTION, THE BOX SHALL BE PLACED WITH ITS TOP 1" ABOVE SURROUNDING GRADE. WHERE PRACTICABLE, PULL BOXES SHOWN IN THE VICINITY OF CURBS AND PAVED SHOULDERS SHALL BE PLACED ADJACENT TO THE BACK OF CURB OR EDGE OF PAVED SHOULDER AND PULL BOXES SHOWN ADJACENT TO STRUCTURE, SHALL BE PLACED ON SIDE OF FOUNDATION FACING AWAY FROM TRAFFIC, UNLESS OTHERWISE NOTED. WHEN PULL BOX IS INSTALLED IN PAVED AREA, THE DEPTH OF THE PULL BOX SHALL BE ADJUSTED SO THAT THE TOP OF THE PULL BOX IS FLUSH WITH THE PAVED SURFACE.
4. PULL BOX COVERS SHALL BE MARKED AS FOLLOWS: "CALTRANS POWER" FOR SERVICE CIRCUITS BETWEEN SERVICE POINT AND SERVICE DISCONNECT; "CALTRANS COMMUNICATION" FOR COMMUNICATION CONTROL CIRCUITS.
5. BONDING JUMPER FOR METAL COVERS SHALL BE 39 3/8" LONG, MINIMUM.
6. THE NOMINAL DIMENSIONS OF THE OPENING IN WHICH THE COVER SETS SHALL BE THE SAME AS THE COVER DIMENSIONS EXCEPT THE LENGTH AND WIDTH DIMENSIONS SHALL BE 1/8" GREATER.
7. COVERS AND BOXES SHALL BE INTERCHANGEABLE WITH CALIFORNIA STANDARD MALE AND FEMALE GAGES. WHEN INTERCHANGED WITH A STANDARD MALE OR FEMALE GAGE, THE TOP SURFACES SHALL BE FLUSH WITHIN 1/8". TOP OUTSIDE EDGE OF CONCRETE COVERS AND PULL BOXES SHALL HAVE A 1/4" MINIMUM RADIUS.

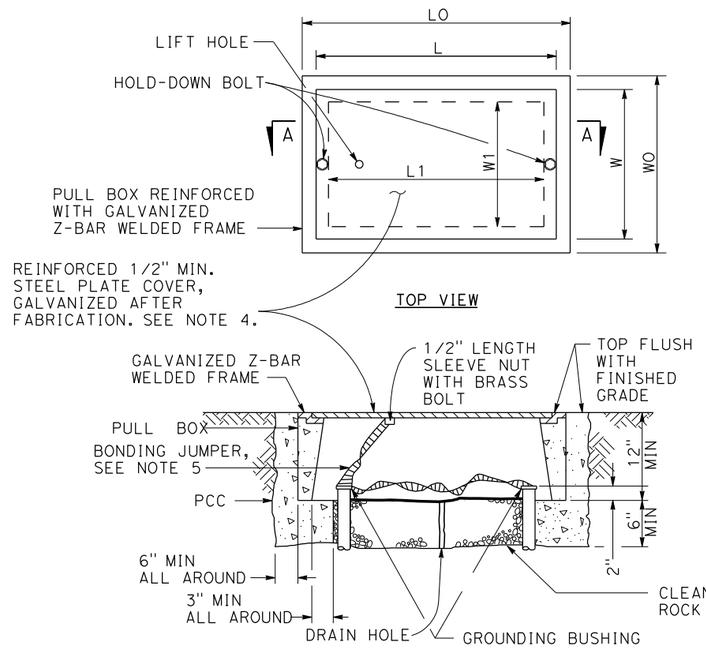

SECTION A-A
NO. 5(T) AND
NO. 6(T) PULL BOX

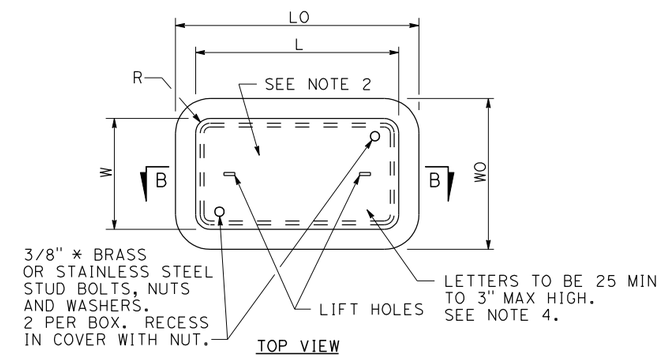

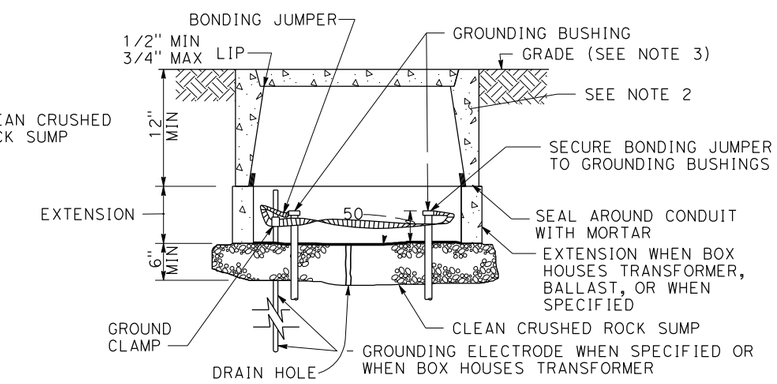

SECTION B-B

INSTALLATION DETAILS

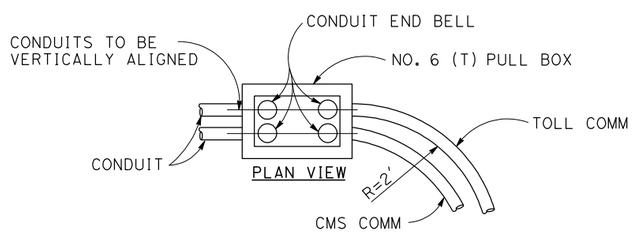

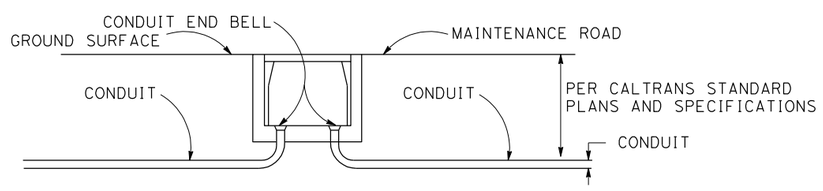

SIDE VIEW

CONDUIT INSTALLATION DETAIL

MISCELLANEOUS ELECTRICAL DETAILS (PULL BOX DETAILS)

NO SCALE

THIS PLAN ACCURATE FOR ELECTRICAL WORK ONLY

E-16

REVISED BY | DATE REVISED

CALCULATED-DESIGNED BY | CHECKED BY

CONSULTANT FUNCTIONAL SUPERVISOR: LARRY JONES

STATE OF CALIFORNIA - DEPARTMENT OF TRANSPORTATION

Caltrans

LAST REVISION 00-00-00 | DATE PLOTTED => 6/8/2009 | TIME PLOTTED => 4:52:18 AM

Dist	COUNTY	ROUTE	POST MILES TOTAL PROJECT	SHEET No.	TOTAL SHEETS
04	Ala	80	1.8/2.1		

REGISTERED CIVIL ENGINEER DATE

PLANS APPROVAL DATE

REGISTERED PROFESSIONAL ENGINEER No. Exp. CIVIL STATE OF CALIFORNIA

THE STATE OF CALIFORNIA OR ITS OFFICERS OR AGENTS SHALL NOT BE RESPONSIBLE FOR THE ACCURACY OR COMPLETENESS OF SCANNED COPIES OF THIS PLAN SHEET.

BAY AREA TOLL AUTHORITY
101 EIGHTH STREET
OAKLAND, CA 94607

URS CORPORATION
55 SOUTH MARKET STREET
SUITE 1500
SAN JOSE, CA 95113-2332

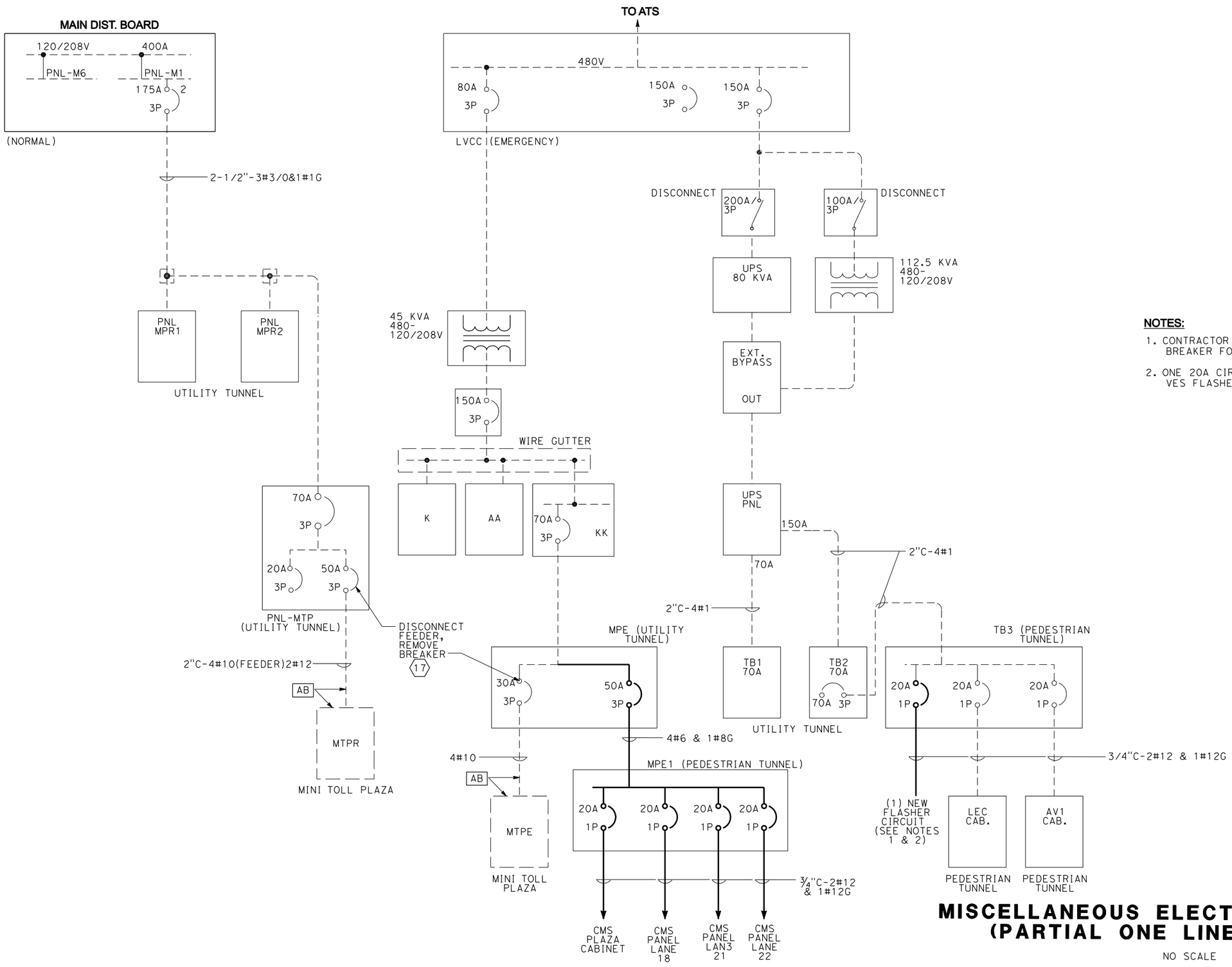

NOTES:

1. CONTRACTOR SHALL RE-USE EXISTING 20A CIRCUIT BREAKER FOR TEMPORARY VES FLASHER.
2. ONE 20A CIRCUIT BREAKER FOR EACH GANTRY FOR VES FLASHERS.

MISCELLANEOUS ELECTRICAL DETAILS (PARTIAL ONE LINE DIAGRAM)

NO SCALE

E-17

REVISED BY | DATE REVISED
CALCULATED-DESIGNED BY | CHECKED BY
CONSULTANT FUNCTIONAL SUPERVISOR: LARRY JONES

STATE OF CALIFORNIA - DEPARTMENT OF TRANSPORTATION
Caltrans

LAST REVISION 00-00-00 | DATE PLOTTED => 6/8/2009 | TIME PLOTTED => 4:52:23 AM

Dist	COUNTY	ROUTE	POST MILES TOTAL PROJECT	SHEET No.	TOTAL SHEETS
04	Ala	80	1.8/2.1		

REGISTERED CIVIL ENGINEER DATE

PLANS APPROVAL DATE

REGISTERED PROFESSIONAL ENGINEER No. Exp. CIVIL STATE OF CALIFORNIA

THE STATE OF CALIFORNIA OR ITS OFFICERS OR AGENTS SHALL NOT BE RESPONSIBLE FOR THE ACCURACY OR COMPLETENESS OF SCANNED COPIES OF THIS PLAN SHEET.

BAY AREA TOLL AUTHORITY
101 EIGHTH STREET
OAKLAND, CA 94607

URS CORPORATION
55 SOUTH MARKET STREET
SUITE 1500
SAN JOSE, CA 95113-2332

(N) PANEL MPE1

PROJECT: SFOBB - ORT

LOCATION: PEDESTRIAN TUNNEL

LOAD DESCRIPTION	LTG.	G.P. REC	OTH.	CB AMP	CB POLE				CB AMP	CB POLE	LTG.	G.P. REC	OTH.	LOAD DESCRIPTION
CMS SIGN			1.00	20	1	1	A	2	20	1				SPARE
CMS SIGN			1.00	20	1	3	B	4	20	1				SPARE
CMS SIGN			1.00	20	1	5	C	6	20	1				SPARE
CMS CABINET			1.10	20	1	7	A	8		1				SPACE
space					1	9	B	10		1				SPACE
SPACE					1	11	C	12		1				SPACE
SPACE					1	13	A	14		1				SPACE
SPACE					1	15	B	16		1				SPACE
SPACE					1	17	C	18		1				SPACE
SPACE					1	19	A	20		1				SPACE
SPACE					1	21	B	22		1				SPACE
SPACE					1	23	C	24		1				SPACE
TOTALS SECTION 1	**0.00**	**0.00**	**4.10**								**0.00**	**0.00**	**0.00**	

VOLTAGE:	LOAD SUMMARY						
120/208V							
PHASE/WIRE:							
3 PHASE, 4 WIRE							
RATING:	CONNECT	DEMAND	DEMAND	BALANCE:	(KVA)	%	AMPS:
100A	LOAD	FACTOR	LOAD	PHASE A:	2.10	51.22	5.83
MAINS:	0.00	125% OF LOAD	0.00	PHASE B:	1.00	24.39	2.78
MLO (Main Lug Only)	0.00	NEC 220-13	0.00	PHASE C:	1.00	24.39	2.78
MOUNTING:	4.10	1.00	4.10				
SURFACE							
A.I.C.:	4.10 KVA		4.10 KVA				
	11.4 AMPS		11.4 AMPS				
BUS SIZE:							
100A							

ADDITIONAL FEATURES:

S&L JOB #: 29018

(E) PANEL TB3

PROJECT: SFOBB - ORT

LOCATION: PEDESTRIAN TUNNEL

PERMANENT TOLLING SYSTEM

LOAD DESCRIPTION	LTG.	G.P. REC	OTH.	CB AMP	CB POLE				CB AMP	CB POLE	LTG.	G.P. REC	OTH.	LOAD DESCRIPTION
VES ILLUMINATORS-1ST GANTRY			0.20	20	1	1	A	2	20	1			0.40	AVI CABINET
VES ILLUMINATORS-2ND GANTRY			0.20	20	1	3	B	4	20	1			0.20	ZEC CABINET
SPARE				20	1	5	C	6	20	1				SPARE
SPARE				20	1	7	A	8						SPACE
SPARE				20	1	9	B	10						SPACE
SPARE				20	1	11	C	12						SPACE
SPARE				20	1	13	A	14						SPACE
SPARE				20	1	15	B	16						SPACE
SPARE				20	1	17	C	18						SPACE
SPARE				20	1	19	A	20						SPACE
SPARE				20	1	21	B	22						SPACE
SPARE				20	1	23	C	24						SPACE
TOTALS SECTION 1	**0.00**	**0.00**	**0.40**								**0.00**	**0.00**	**0.60**	

VOLTAGE:	LOAD SUMMARY						
120/208V							
PHASE/WIRE:							
3 PHASE, 4 WIRE							
RATING:	CONNECT	DEMAND	DEMAND	BALANCE:	(KVA)	%	AMPS:
100A	LOAD	FACTOR	LOAD	PHASE A:	0.60	60.00	1.67
MAINS:	0.00	125% OF LOAD	0.00	PHASE B:	0.40	40.00	1.11
	0.00	NEC 220-13	0.00	PHASE C:	0.00	0.00	0.00
MOUNTING:	1.00	1.00	1.00				
SURFACE							
A.I.C.:	1.00 KVA		1.00 KVA				
	2.8 AMPS		2.8 AMPS				
BUS SIZE:							
100A							

ADDITIONAL FEATURES:

S&L JOB #: 29018

MISCELLANEOUS ELECTRICAL DETAILS (PANELBOARD SCHEDULES)

E-18

STATE OF CALIFORNIA - DEPARTMENT OF TRANSPORTATION

Caltrans

CONSULTANT FUNCTIONAL SUPERVISOR: LARRY JONES

CALCULATED-DESIGNED BY

CHECKED BY

REVISED BY

DATE REVISED

LAST REVISION 00-00-00

DATE PLOTTED => 6/8/2009
TIME PLOTTED => 4:52:29 AM

Dist	COUNTY	ROUTE	POST MILES TOTAL PROJECT	SHEET No.	TOTAL SHEETS
04	Ala	80	1.8/2.1		

REGISTERED CIVIL ENGINEER DATE

PLANS APPROVAL DATE

REGISTERED PROFESSIONAL ENGINEER No. Exp. CIVIL STATE OF CALIFORNIA

THE STATE OF CALIFORNIA OR ITS OFFICERS OR AGENTS SHALL NOT BE RESPONSIBLE FOR THE ACCURACY OR COMPLETENESS OF SCANNED COPIES OF THIS PLAN SHEET.

BAY AREA TOLL AUTHORITY
101 EIGHTH STREET
OAKLAND, CA 94607

URS CORPORATION
55 SOUTH MARKET STREET
SUITE 1500
SAN JOSE, CA 95113-2332

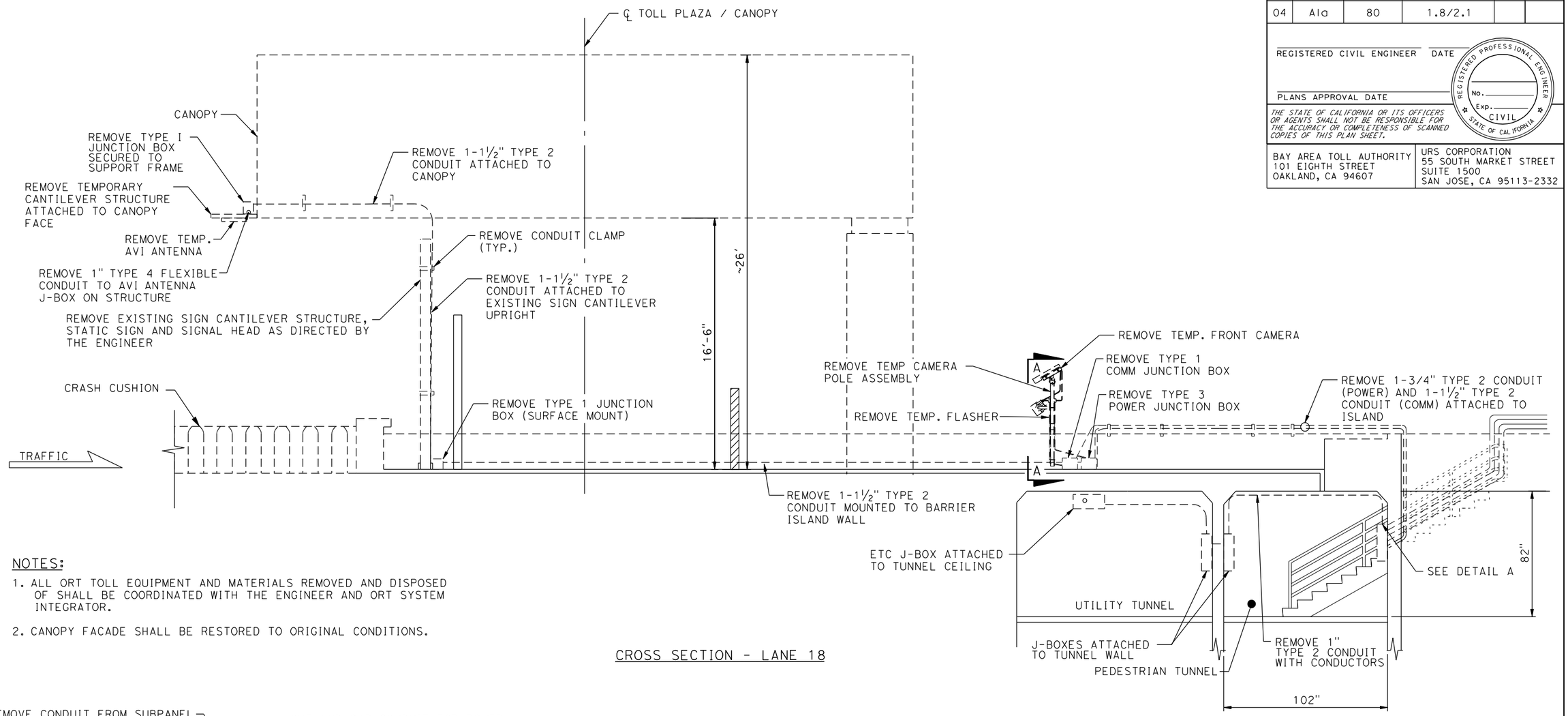

CROSS SECTION - LANE 18

NOTES:

1. ALL ORT TOLL EQUIPMENT AND MATERIALS REMOVED AND DISPOSED OF SHALL BE COORDINATED WITH THE ENGINEER AND ORT SYSTEM INTEGRATOR.
2. CANOPY FACADE SHALL BE RESTORED TO ORIGINAL CONDITIONS.

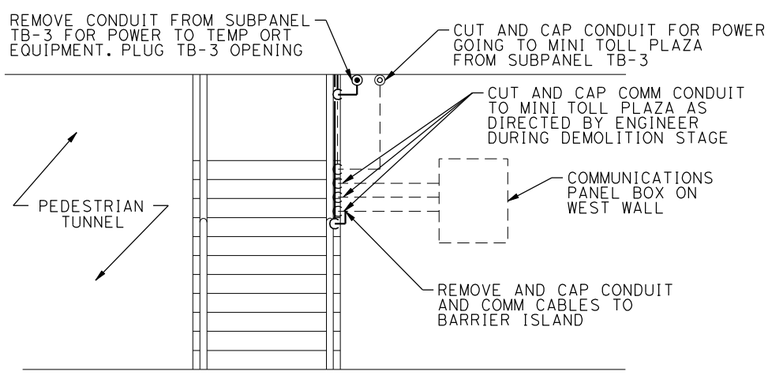

DETAIL A

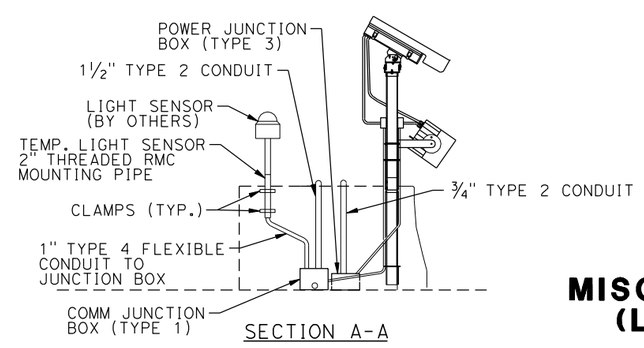

SECTION A-A

MISCELLANEOUS ELECTRICAL DETAILS (LANE LEVEL-ISLAND LANE 17/18 CONDUIT ROUTING)

NO SCALE

THIS PLAN ACCURATE FOR ELECTRICAL WORK ONLY

E-19

REVISED BY | DATE REVISED

CALCULATED-DESIGNED BY | CHECKED BY

CONSULTANT FUNCTIONAL SUPERVISOR: LARRY JONES

STATE OF CALIFORNIA - DEPARTMENT OF TRANSPORTATION

Caltrans

LAST REVISION 00-00-00 | DATE PLOTTED => 6/8/2009 | TIME PLOTTED => 4:52:31 AM

BORDER LAST REVISED 4/11/2008

RELATIVE BORDER SCALE IS IN INCHES 0 1 2 3

USERNAME=> FBT03
DGN FILE=> c:\my projects\bryan\bata - ort cad files\submittal -- may 19-2009\Final 5_26_09\Conduit_Routing03.dgn

CU 00000 | EA 0G420K

Dist	COUNTY	ROUTE	POST MILES TOTAL PROJECT	SHEET No.	TOTAL SHEETS
04	Ala	80	1.8/2.1		

REGISTERED CIVIL ENGINEER DATE

PLANS APPROVAL DATE

REGISTERED PROFESSIONAL ENGINEER No. Exp. CIVIL STATE OF CALIFORNIA

THE STATE OF CALIFORNIA OR ITS OFFICERS OR AGENTS SHALL NOT BE RESPONSIBLE FOR THE ACCURACY OR COMPLETENESS OF SCANNED COPIES OF THIS PLAN SHEET.

BAY AREA TOLL AUTHORITY
101 EIGHTH STREET
OAKLAND, CA 94607

URS CORPORATION
55 SOUTH MARKET STREET
SUITE 1500
SAN JOSE, CA 95113-2332

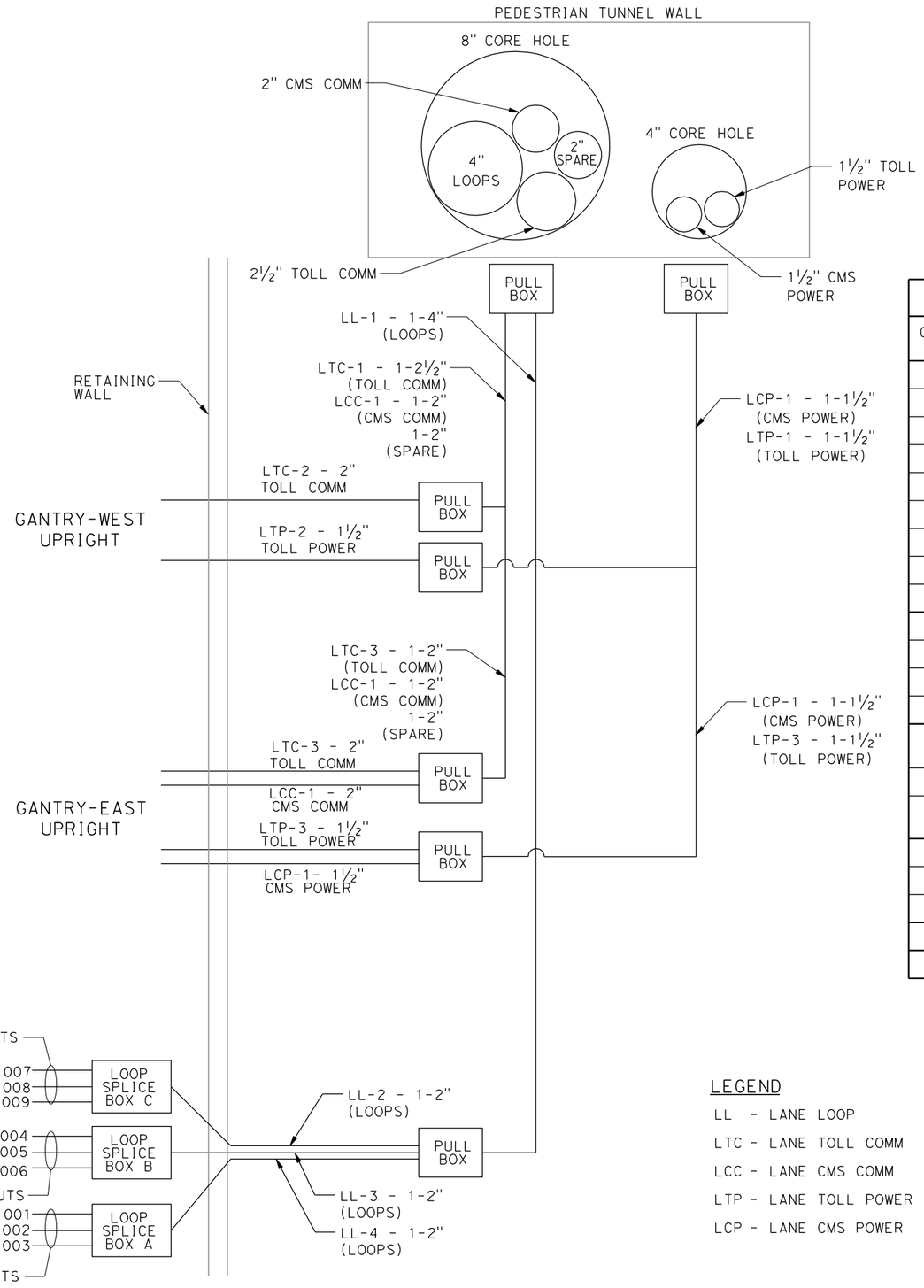

LANE LEVEL CONDUIT SCHEDULE

CONDUIT NUMBER	CONDUIT AND CONDUCTOR SIZE	DESCRIPTION
001	SAWCUT, (2) ANIXTER 6M-1401-03-1000 (14AWG)	LOOP WIRE (LANE 18 ENTRY LOOP)
002	SAWCUT, (8) ANIXTER 6M-1401-03-1000 (14AWG)	LOOP WIRE (LANE 18 AXLE LOOPS)
003	SAWCUT, (4) ANIXTER 6M-1401-03-1000 (14AWG)	LOOP WIRE (LANE 18 EXIT AND TRIGGER LOOPS)
004	SAWCUT, (2) ANIXTER 6M-1401-03-1000 (14AWG)	LOOP WIRE (LANE 21 ENTRY LOOP)
005	SAWCUT, (8) ANIXTER 6M-1401-03-1000 (14AWG)	LOOP WIRE (LANE 21 AXLE LOOPS)
006	SAWCUT, (4) ANIXTER 6M-1401-03-1000 (14AWG)	LOOP WIRE (LANE 21 EXIT AND TRIGGER LOOPS)
007	SAWCUT, (2) ANIXTER 6M-1401-03-1000 (14AWG)	LOOP WIRE (LANE 22 ENTRY LOOP)
008	SAWCUT, (8) ANIXTER 6M-1401-03-1000 (14AWG)	LOOP WIRE (LANE 22 AXLE LOOPS)
009	SAWCUT, (4) ANIXTER 6M-1401-03-1000 (14AWG)	LOOP WIRE (LANE 22 EXIT AND TRIGGER LOOPS)
LL-1	(21) BELDEN 8720 (14 AWG)	LOOP LEAD-IN CABLE
LL-2	(7) BELDEN 8720 (14 AWG)	LOOP LEAD-IN CABLE
LL-3	(7) BELDEN 8720 (14 AWG)	LOOP LEAD-IN CABLE
LL-4	(7) BELDEN 8720 (14 AWG)	LOOP LEAD-IN CABLE
LTC-1	(6)PULNIX COMPOSITE, (3)4-FIBER MMFO, (1) 3-PAIR #14 AWG AVI POWER(DC), (2)PULNIX 1372	EAST & WEST GANTRY TOLL EQUIPMENT (COMM & DC POWER) (FROM ZEC & AVI CABINET IN PED. TUNNEL)
LTC-2	(3)PULNIX COMPOSITE, (1)PULNIX 1372	FRONT CAMERAS (COMM & DC POWER), LIGHT SENSOR COMM & DC POWER
LTC-3	(3)PULNIX COMPOSITE, (3)4-FIBER MMFO, (1) 3-PAIR #14 AWG AVI POWER(DC), (1)PULNIX 1372	REAR CAMERAS (COMM & DC POWER), AVI CAMM & DC POWER, LIGHT SENSOR COMM & DC POWER
LTP-1	(4)#12, (2)#12G	FLASHERS ON GANTRIES, 120VAC POWER (FROM TB-3 IN PED. TUNNEL)
LTP-2	(2)#12, (1)#12G	FLASHERS (WEST GANTRY) 120VAC POWER
LTP-3	(2)#12, (1)#12G	FLASHERS (EAST GANTRY) 120VAC POWER
LCC-1	(3)RS-422 COMM CABLES (#22 AWG)	CMS PANEL COMM (FROM CMS CABINET)
LCP-1	(6)#12, (3)#12G	CMS PANEL POWER (FROM MPE1 IN PED. TUNNEL)

NOTES:

1. ALL ORT (TOLL) COMM AND POWER CABLING WILL BE INSTALLED BY OTHERS.
2. CONTRACTOR TO INSTALL ALL CMS COMM AND POWER CABLING.
3. ALL POWER CONDUCTORS SHALL BE COPPER AND RATED 600 VOLT, TYPE THHN, 90 DEGREE C.

LEGEND

LL - LANE LOOP
LTC - LANE TOLL COMM
LCC - LANE CMS COMM
LTP - LANE TOLL POWER
LCP - LANE CMS POWER

CONDUIT ROUTING
ONE LINE DIAGRAM & SCHEDULE
(LANE LEVEL)

E-20

THIS PLAN ACCURATE FOR ELECTRICAL WORK ONLY

REVISED BY | DATE REVISED
CALCULATED-DESIGNED BY | CHECKED BY
CONSULTANT FUNCTIONAL SUPERVISOR: LARRY JONES
STATE OF CALIFORNIA - DEPARTMENT OF TRANSPORTATION
Caltrans

LAST REVISION 00-00-00 | DATE PLOTTED => 6/8/2009 | TIME PLOTTED => 4:52:34 AM

Dist	COUNTY	ROUTE	POST MILES TOTAL PROJECT	SHEET No.	TOTAL SHEETS
04	Ala	80	1.8/2.1		

REGISTERED CIVIL ENGINEER DATE

PLANS APPROVAL DATE

REGISTERED PROFESSIONAL ENGINEER No. Exp. CIVIL STATE OF CALIFORNIA

THE STATE OF CALIFORNIA OR ITS OFFICERS OR AGENTS SHALL NOT BE RESPONSIBLE FOR THE ACCURACY OR COMPLETENESS OF SCANNED COPIES OF THIS PLAN SHEET.

BAY AREA TOLL AUTHORITY
101 EIGHTH STREET
OAKLAND, CA 94607

URS CORPORATION
55 SOUTH MARKET STREET
SUITE 1500
SAN JOSE, CA 95113-2332

TUNNEL LEVEL CONDUIT SCHEDULE

CONDUIT NUMBER	CONDUIT AND CONDUCTOR SIZE	DESCRIPTION
TTC-1	(21) BELDEN 8720 (14 AWG)	LOOP LEAD-IN CABLE (FROM LOOP SPLICE BOX)
TTC-2	(6)PULNIX COMPOSITE, (3)4-FIBER MMFO, (1)3-PAIR #14 AWG AVI POWER(DC), (2)PULNIX 1372	EAST & WEST GANTRY TOLL EQUIPMENT (COMM & DC POWER)
TTC-3	(21) BELDEN 8720 (14 AWG)	LOOP LEAD-IN CABLES (FROM WIREWAY)
TTC-4	(6)PULNIX COMPOSITE, (2)PULNIX 1372	LOOP LEAD-IN CABLES, CAMERA COMPOSITE CABLES, LIGHT SENSOR CABLES (FROM WIREWAY)
TTC-5	(3)4-FIBER MMFO, (1)3-PAIR #14 AWG AVI POWER(DC)	AVI COMM & POWER
TTC-6	UPS POWER, MISC (TBD BY TOLL SYSTEMS INTEGRATOR)	
TCC-1	(3)RS-422 COMM CABLES (#22 AWG)	TO/FROM CMS PANELS ON GANTRIES
TCC-2	(3)RS-422 COMM CABLES (#22 AWG)	TO/FROM CMS PANELS ON GANTRIES
TCC-3	(1)12-FIBER SMFO (TYPE D CABLE)	TO/FROM EXISTING CMS CABINET (LANES 2/3) IN UTILITY TUNNEL
TTP-1	(4)#12, (2)#12G	TO FLASHERS ON GANTRIES (FROM TB-3)
TTP-2	(2)#12, (1)#12G	TO ZEC CABINET (FROM TB-3)
TTP-3	(2)#12, (1)#12G	TO AVI CABINET (FROM TB-3)
TCP-1	(6)#12, (3)#12G	TO CMS PANELS ON EAST GANTRY
TCP-2	(2)#12, (1)#12G	TO CMS CABINET (FROM MPE-1)

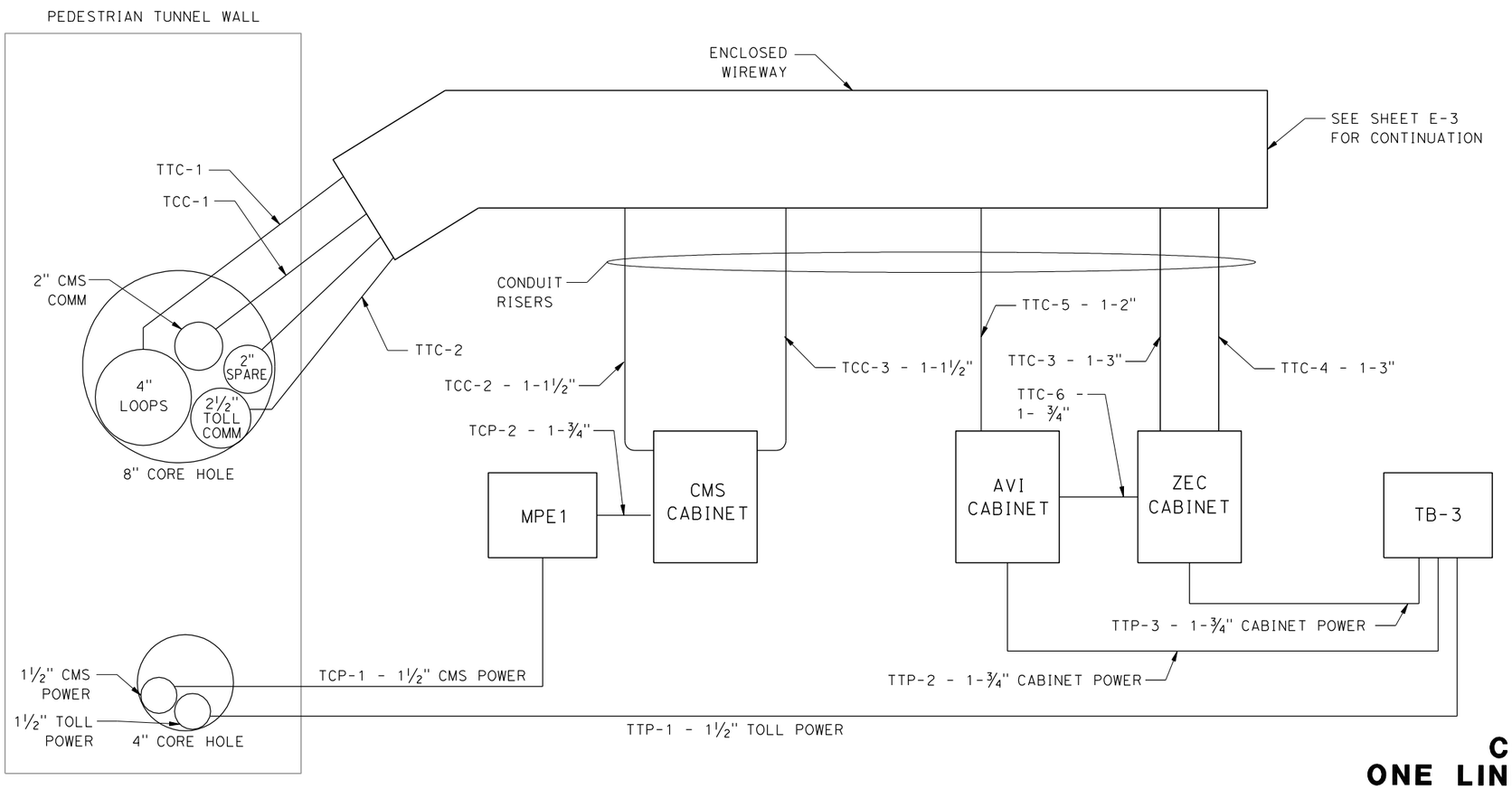

LEGEND

TTP - TUNNEL TOLL POWER
TCC - TUNNEL CMS COMM
TCP - TUNNEL CMS POWER
TTC - TUNNEL TOLL COMM

NOTES:

1. ALL ORT (TOLL) COMM AND POWER CABLING WILL BE INSTALLED BY OTHERS EXCEPT FOR LANES 21 AND 22 LOOPS.
2. CONTRACTOR TO INSTALL ALL CMS COMM AND POWER CABLING.

CONDUIT ROUTING ONE LINE DIAGRAM & SCHEDULE (TUNNEL LEVEL)

THIS PLAN ACCURATE FOR ELECTRICAL WORK ONLY

E-21

REVISED BY | DATE REVISED
CALCULATED-DESIGNED BY | CHECKED BY
CONSULTANT FUNCTIONAL SUPERVISOR: LARRY JONES
STATE OF CALIFORNIA - DEPARTMENT OF TRANSPORTATION
Caltrans

LAST REVISION 00-00-00 | DATE PLOTTED => 6/8/2009 | TIME PLOTTED => 4:52:38 AM